ETPC

EUROPEAN TRACTOR PULLING COMMITTEE

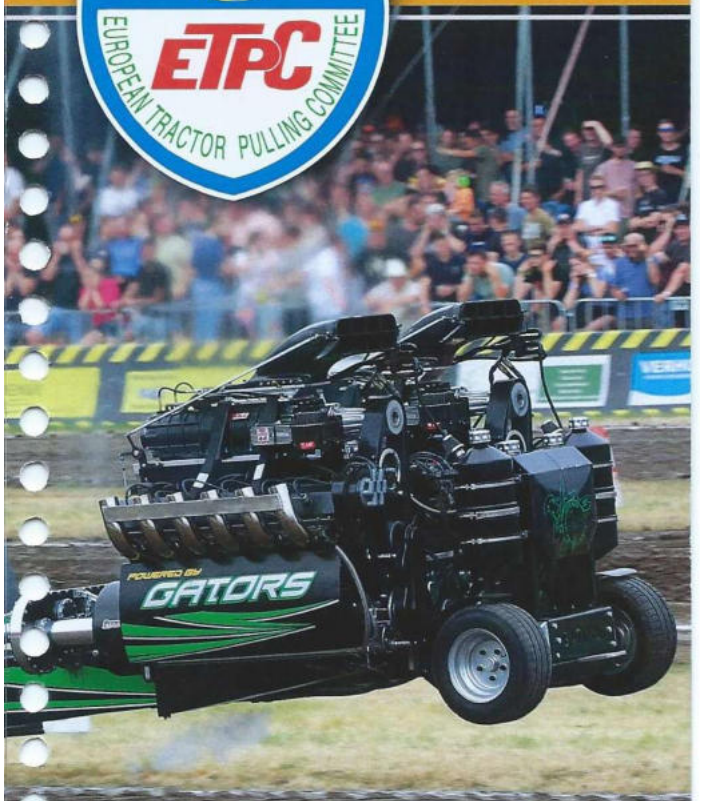

2025

Rulebook

European Tractor Pulling Committee

Pulling rules Europe

The European Tractor Pulling Committee made this rulebook as a guide for you. We hope it will help to make pulling easy and fair for you as we strife to standardize pulling rules and make Truck and Tractor Pulling a safe and fair sport for all involved.

Whenever you need more information, please contact the ETPC Representative of your national organisation. All individual inquiries from pullers, promoters etc. must go through the respective national boards, which, if needed, will pass them on to the ETPC.

ETPC thanks WPI/NTPA for their help to make this rulebook.

Neither the ETPC Board nor the ETPC Tech and Safety Board, nor any of their members can be held responsible for any damage or loss of technical or other kind, or for any kind of human injury that may be caused by Truck and Tractor Pulling sport.

Official ETPC website: **www.tractorpulling.com**
Rule-updates, changes & amendments can be found on the ETPC website.

E-mail contact ETPC Tech & Safety board:
Mr. Willem Wempe; willemwempe@hetnet.nl

Euro: European Currency

| : new or revised/renewd rule (partly or complete) in this book

---

Copyrights:
© European Tractor Pulling Committee
© National Tractor Pullers Association, Inc.
Any reproductions or reprints of this ETPC-rulebook are not permitted without the written consent of the European Tractor Pulling Committee.

MINIMUM STRENGTHS

METRIC (ISO 898)		INCH (SAE J429)
	=	
Grade: 4, 8 (4.6, 5.8) Tensile: 429 MPa (60,900 psi)		Grade: 2 Tensile: 60,000 psi
	=	
Grade: 8.8 Tensile: 830 MPa (120,350 psi)		Grade: 5 Tensile: 120,000 psi
	=	
Grade: 10.9 Tensile: 1040 MPa (150,800 psi)		Grade: 8 Tensile: 150,000 psi
	=	
Grade: 12.9 Tensile: 1220 MPa (176,900 psi)		Grade: ASTM-A574 Tensile: 170,000 psi Note: Generally not marked

Contents ETPC rulebook 2025

Chapter 1: ETPC / COMPETITION RULES

A. ETPC 8
Safety / Warranty disclaimer / Notice 8
B. Competition rules 8
A. Eligibility of contestants 8
B. Vehicle registration 8
C. Entry procedures 10
D. Weight classes, Weighing and Drawbar measuring procedure 10

Chapter 2: GENERAL RULES for Modified tractors, Super Stocks, Pro Stocks, Limited Super Stocks, Modifieds <950 kg, Two Wheel Drives and Trucks

A. Brakes 11
B. Tow hitch 11
C. Drawbars 12
D. Clutches, flywheels, automatics and protection 15
E. Aviation, marine and industrial engines 21
F. Turbine engines 21
G. Driveline and Driveline shielding 24
H. Chassis 26
I. Engine shielding 27
J. Engine throttles 29
K. Exhaust systems/turbo guarding 29
L. Fuel and fuel containers 45
M. Kill switches 45
N. Safety 47
O. Seats and fenders 49
P. Stabilizer bars 49
Q. Roll Over Protection 51
R. Supercharger/turbocharger 51
S. Tires 54
T. Weights 55

Chapter 3: SUPER STOCKS

A. Chassis 55
B. Frame/sheet metal 57
C. Frame options 57
D. Engines 58
E. Clutches 58
F. Shatterblankets 59
G. Firewall/deflection shield 59
H. Starting chemicals 59
I. Onboard fire control systems 59
J. Legality 59

Chapter 4: PRO STOCKS
A. Chassis 60
B. Frame/sheet metal 61
C. Frame options 62
D. Engines 63
E. Clutches 64
F. Shatterblankets 64
G. Firewall/deflection shield 64
H. Starting chemicals 64
I. Onboard fire control systems 64
J. Legality 65

Chapter 5: MODIFIEDS (>950 kg) 65

Chapter 6: MODIFIEDS <950 kg 65

Chapter 7: TWO WHEEL DRIVES
A. General rules 65
B. Engines and drivelines 67

Chapter 8: LIMITED SUPER STOCKS
A. Chassis 68
B. Frame/sheet metal 70
C. Frame options 70
D. Engines 71
E. Clutches 73
F. Shatterblankets 73
G. Firewall/deflection shield 73
H. Starting chemicals 73
I. Onboard fire control systems 73
J. Legality 73
K. Tires 74

Chapter 9a: TRUCKS, FARM STOCKS & GARDEN PULLERS .. 74

Chapter 9b: EXHIBITION VEHICLES 74

Chapter 10: OPERATION OF CONTEST
A. General rules 75
B. Track and track officials 77
C. Test pulls and options 78
D. Pull offs 79
E. Summary of causes for disqualification 80
F. Protests 80
G. Environmental protection and Safety rules 80

Chapter 11: EURO CUP and EUROPEAN CHAMPIONSHIP PULLS
A. Requirements for Euro Cup and European Championship pulls . 82
B. Procedures for Euro Cup and European Championship pulls . . . 82

Chapter 12: LIMITS
A. General rules 84
B. Limits, all classes 84

Chapter 13: ETPC SAFETY PROGRAM
A. Approved manufacturers 90
- Multiple disc clutch assemblies
- Shatterblankets
- Turbineblankets
- Bellhousings
- Blower restraints - devices
- Blower restraints - straps
- High performance harmonic balancers

B. Age limits for safety equipment 90

Chapter 14: ROLL OVER PROTECTIONS
A. General Considerations 91
B. Construction 91
C. Remarks 92
Drawings and dimensions 93

Chapter 1:

ETPC COMPETITION RULES

A. ETPC

The European Tractor Pulling Committee is the coordinating organisation in Europe. The European Tractor Pulling Committee is an association, whose objectives are to pursue and promote Truck and Tractor Pulling in the widest sense in Europe.

The following organisations are affiliated to the ETPC:

Members:

Austria	Osterreichische Tractor Pulling Organisation (OTPO)
Denmark	Dansk Tractor Pulling (DTP)
Finland	Finnish Tractor Pulling Association (FTPA)
France	Federation de Tracteur Pulling Francais (FTPF)
Germany	Deutsche Trecker Treck Organisation (DTTO)
Great Britain	British Tractor Pullers Association (BTPA)
Hungary	Tractor Pulling Association of Hajduboszormeny (TPAH)
Ireland	Irish Tractor Pulling Club (ITPC)
Luxembourg	Letzebuerger Tractor Pulling Federation (LTPF)
Netherlands	Nederlandse Truck en Tractor pulling Organisatie (NTTO)
Norway	Norges Tractor Pulling Forbund (NTPF)
Sweden	Svenska Tractor Pulling Forbundet (STPF)
Switzerland	Schweizer Tractor Pulling Vereinigung (STPV)

Guest-members:

Belgium	Belgische Verenigde Pullers (BVP)
Italy	Associazione Tractor Pulling Italia (ATPI)

Safety: At every ETPC sanctioned event, safety is the name of the game. The sport of Truck and Tractor Pulling has more brute horsepower than any other motorsport in the world.
With machinery this powerful, safety aspects cannot be overemphasized. There are many different types of safety equipment required, and this equipment will appear in many different areas of the vehicles. During a pull, safety is always in the front of everyone's mind. The end of the track must be kept open at all times. The ETPC as well as every one of its member organizations will refuse to operate any pull at which a safety hazard is posed to any person.
Safety is everybody's responsibility.
The promoter, pullers, spectators, and ETPC officials must work together to ensure the safety of all persons involved.

Warranty disclaimer: The rules in this book are intended as guidelines for the sport of truck and tractor pulling, and the rules relating to the safety of the equipment are the responsibility of each driver who participates in the sport of truck and tractor pulling under these rules. No expressed or implied warranty of safety is intended nor may be inferred from the publication of these rules, nor the compliance therewith. Nothing herein should be construed as a guarantee against injury or death to participants, bystanders or spectators.

Specifications and rules set forth in this rule book are based upon the recommendations of the WPI/NTPA, competing members, crewmen and other participants in the sport of truck and tractor pulling. All participants in an ETPC sanctioned event must assume all liability for any damage or loss caused by or from their equipment and the use thereof.
The ETPC specifically states that it has not tested any equipment or use of equipment that it refers to in the rulebook and makes no warranties either specific or implied with regard to or any use thereof. The user must look to the manufacturer with regard to said warranties.

Notice
Competitors are reminded and encouraged to contact the board of their organisation should they plan to build a competition vehicle employing new or unique processes or techniques; or are seeking to alter, change or modify existing competition vehicles, where such processes, techniques, or modifications could raise questions of legality in items of the rules regarding construction and/or safety.

B. COMPETITION RULES

A. Eligibility of contestants (only European countries)

1. All contestants participating in any truck and tractor pulling contest sanctioned by an ETPC member must have a current competition membership. Contestants must be 18 years of age, or at least 16 years of age with a parent's or a guardian's written consent.
2. At all events sanctioned by ETPC of affiliated members, tractors can only pull using an ETPC sanctioned sled of the appropriate license. Penalties for teams driving at events not sanctioned by ETPC or affiliated members can be implicated as determined suitable by the affiliated member country.

B. Vehicle registration

1. Registration means identifying your vehicle with a registration number for points calculation. All vehicles must be registered before competing.
2. The ETPC or affiliated member registration number must appear in a visible area of the vehicle.
3. A vehicle owner may sell the vehicle including the registration number and accumulated points. If points are sold with the vehicle, all points for all classes must be sold.
4. A puller can start competing with a new vehicle during a pulling season and keep his previous points from the season in question on condition that he uses the same name and registration number as with his old vehicle, and his old vehicle is not run anymore on that name and number.
5. On all above-mentioned changes during the pulling year, to be calculated from the 1st of January, your organization board must be notified in writing after sale and before the vehicle is registered for the next pull.

C. Entry procedures

1. Each vehicle may enter at two classes, but only once at each class. A vehicle must compete in a class at that individual event before it can receive points or starting money.
2. A puller receives no starting money or points unless there has been made a measurable pull in a class.
3. No mixing of classes.
4. Classes in a given session will be run in that session, but not necessarily in the scheduled order.
5. Once a puller has scratched from a class, he may not re-enter.
6. If a puller's vehicle breaks in a previous class and cannot make the pull order in the next class or session, the competitor may ask the Track Official for extra time. It is at the Track Official's discretion to allow the puller to drop positions.

D. Weight classes, Weighing and Drawbar measuring procedure

1. On each location there will be a designated area, set up by the track officials, as a tech area, where all vehicles will be routinely teched, the same applies for weighing and drawbar measuring.
2. The weigh bridge must be ETPC approved and big enough to weigh in the entire tractor at one time.
3. All official weights include driver, vehicle with oil, water, fuel, and safety equipment, ready to compete. All drivers must weigh in with the pulling vehicle when it is officially weighed. No vehicles that exceed the class weight will be allowed past the weigh bridge. No adding fuel or weights unless reweighed. Weighing out is at the discretion of the track officials.
4. All drawbars need to be measured short time prior to hooking. After that time the drawbar can not be altered. A maximum of 100 kg (modifieds <950 kg: 30 kg) of weight may be moved in either direction.
   No air pressure to be altered in tires after drawbar is measured.
5. Should a puller move more than 100 kg modifieds <950 kg: 30 kg) of weight forward from the rear of the tractor, the drawbar can be remeasured before pulling at the discretion of the track officials.
6. Drawbar can be remeasured after the pull at the discretion of the track officials.
   If measured after the pull maximum tolerance on drawbar height is 10 mm. with rear wheels bigger than 30 inch diameter and maximum tolerance on drawbar height is 5 mm. with rear wheels smaller than 30 inch diameter.
   If any doubts, than drawbar must be remeasured on the weight bridge.
   In case of violation of this rule, penalty shall be disqualification for that day with loss of points and price-money.

ETPC WEIGHT CLASSES

Modified	950 kg (mini mod.)	2500 kg (light mod.)	3500 kg (modified)	4000 kg (heavy modified)
Super stock	3500 kg			
Pro stock	3500 kg			
Limited super stock	3500 kg			
Two wheel drive	2600 kg			
Trucks	See ETPC Truck Rulebook on website			
Farm Stock	See ETPC Farm Stock Rulebook on website			
Garden Pullers	See ETPC Garden Puller Rulebook on website			

NOTICE: All official weights include driver, vehicle with oil, water and fuel, ready to compete. The driver must be on the weigh bridge with their vehicle when they are officially weighed in and out.

DRAWBAR HEIGHT AND LENGTH

Class	Max. Height	Min. Length
Modifieds >950 kg	500 mm	450 mm
Super stock	500 mm	450 mm
Pro stock	500 mm	450 mm
Limited super stock	500 mm	450 mm
Modifieds <950 kg	330 mm	150 mm
Two wheel drives	760 mm	450 mm
Trucks	See ETPC Truck Rulebook on website	
Farm Stock	See ETPC Farm Stock Rulebook on website	
Garden Pullers	See ETPC Garden Puller Rulebook on website	

Chapter 2:

GENERAL RULES
for MODIFIED TRACTORS, SUPER STOCKS, PRO STOCKS, LIMITED SUPER STOCKS, MODIFIEDS <950 kg,and TWO WHEEL DRIVES

A. Brakes

All competing vehicles must be equipped with working rear brakes.

B. Tow hitch

All vehicles are required to have a tow-hitch on the front of their vehicle. The tow hitch can extend a maximum of 150 mm ahead of the furthermost front portion of the vehicle (hitch will not be counted in length when measuring the vehicle). The tow hitch must have a 75 mm diameter hole, preferably positioned horizontally, and be strong enough for pushing or pulling the vehicle and lifting the front of the vehicle at its heaviest weight. During towing and/or lifting the vehicle, driver (or helper min. 16 years old) must be seated.
Tow hitch must be at least 80 mm. above the ground.
The device must not be used for any other purpose.

C. Drawbars

1. Drawbars shall be constructed so that in the event of drawbar breakage, the drawbar supports do not pull from a top link or brace above the centerline of the rear axle of the vehicle.
2. A drawbar that has provisions to be made shorter than legal length is not acceptable.
3. Drawbars must be rigid in all directions.
4. Drawbars must be parallel to the ground with a tolerance of +/- 10 degrees.
   Pivot pin must be on the same plane as the hitch point (parallel to the ground as above).
5. Drawbars and hitching devices must be made out of solid steel with a minimum tensile strength of 520 N/mm2 in all weight classes and all divisions. No welding on drawbars.
6. No portion of the vehicle may interfere with sled, chain or hook during a pull or while being hooked or unhooked.
7. An area of 150 mm wide and 300 mm high immediately above the drawbar must be free of all obstructions (including weights, stabilizer bars) for easy hooking and unhooking.
8. Drawbars and stabilizer bars must not be connected to each other.
9. The drawbar distance from center of rear axle cannot change during pull.
10. On two wheel drive trucks the hooking point must be the highest point of the hitch/drawbar.
11. Vehicles with a second drawbar must have their primary drawbar 200 mm above the second drawbar. Second drawbar may not interfere with measurements of primary drawbar. Hole in second drawbar must be covered with a metal cover.

Note: The ETPC highly recommends that a competing vehicle should not be tied down to a tow or transport vehicle through or on the drawbar in any way.

Big tractors (Modified, Super Stock, Pro Stock, Limited Super Stock) and Two Wheel Drives:

Vehicles in all classes regardless of divisions, except Modifieds <950 kg and Gardenpullers, must meet the following:

1. A drawbar must be equipped with a hitching device, minimum thickness 37 mm, and must have a minimum of 75 mm round hole.
2. Drawbars to be a minimum of 1900 mm2 total material (steel) at any point. This includes the area of the mounting pin with the pin removed.
3. The mounting pin must be made of steel with a minimum thickness of 25 mm.
4. The vertical cross section A-A of the drawbar must be a minimum of 1900 mm2, and the horizontal cross section G-G must be a minimum of 1000 mm2 with a minimum of 10 mm of cross sectional thickness between the front of drawbar and the pinhole (H).

Dimensions drawbar big tractors and Two Wheel Drives:

Cross section A-A (surface)	≥ 1900 square mm
Dimension B	= 37 mm
Cross section C-C (surface)	≥ 1900 square mm

Diameter mounting pin D	≥ 25 mm
Length drawbar E	≥ 450 mm
Hole hitching device F	= 75 mm
Cross section G-G minimum surface	≥ 1000 square mm
Dimension H	≥ 10 mm

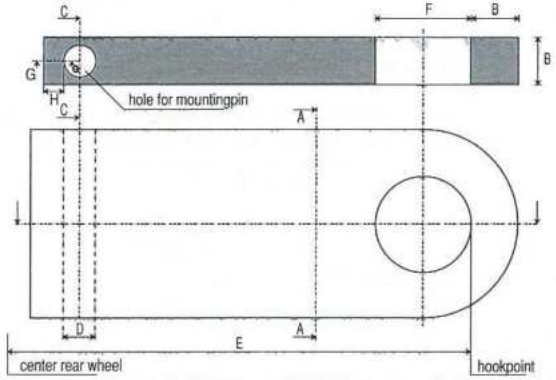

Illustration 2-1: dimensions drawbar big tractors and Two Wheel Drives

Other examples of drawbars are:

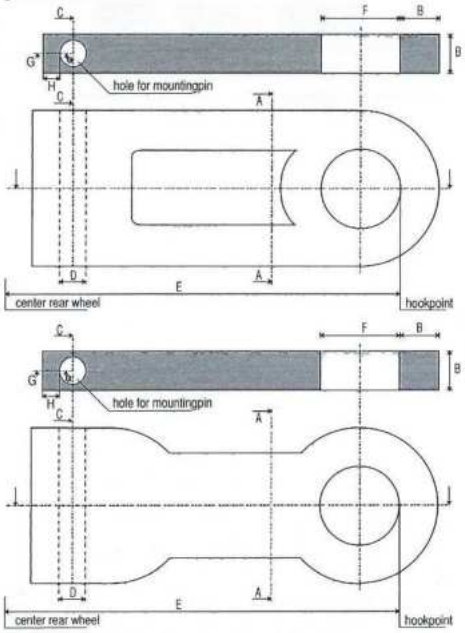

Illustration 2-2: other examples of drawbars

Modifieds <950 kg:

1. A drawbar must be equipped with a hitching device, minimum thickness 25 mm, and must have a minimum of 50 mm round hole.
2. Drawbars to be a minimum of 645 mm2 total material (steel) at any point. This includes the area of the pin with the pin removed.
3. The mounting pin must be made of steel with a minimum thickness of 14 mm, or a bolt minimum grade 8.8 with head and secured nut.
4. Drawbar height adjustment bolts to be 130 mm or less from hooking point.
5. The vertical cross section A-A must be a minimum of 645 mm2, and the horizontal cross section G-G must be a minimum of 350 mm2 with a minimum of 10 mm of cross sectional thickness between the front of drawbar and the pinhole (H).

Cross section A-A (surface)	≥ 645 square mm
Dimension B	= 25 mm
Cross section C-C (surface)	≥ 645 square mm
Diameter mounting pin D	≥ 14 mm
Length drawbar E	≥ 150 mm
Hole hitching device F	= 50 mm
Cross section G-G minimum surface	≥ 350 square mm
Dimension H	≥ 10 mm

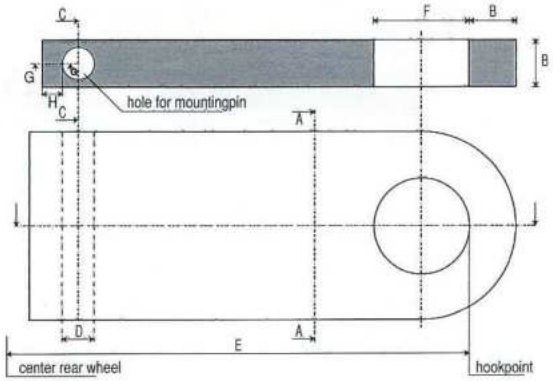

Illustration 2-3: dimensions drawbar Modified <950 kg

6. The drawbar receiver or the material where the front of the drawbar is attached must have a minimum of 6 mm thick metal on each side of the horizontal mounting pin. There must be a minimum of 13 mm metal remaining where the hole is drilled (see illustration 2-4). Drawbar to be connected to drawbar receiver with a steel pin with minimum diameter of 14 mm, or a bolt M14 minimum grade 8.8 with head and secured nut.

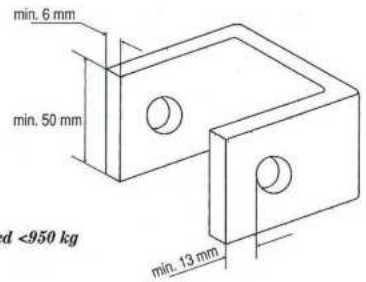

Illustration 2-4:
drawbar receiver Modified <950 kg

D. Clutches, flywheels, automatics and protection

1. The use of torque converters or automatic shifts will be permitted.
2. All automatic transmissions must be 360 degrees covered with a steel plate 3 mm thick.
   The steel cover around the torque converter must be covering the total width of the converter and must be at least 10 mm thick, or an ETPC approved blanket must be used. Plate or blanket is to extend from rear of engine block to front of tail housing. Blanket must be fastened forward securely with two straps on each side, one fastening point above crankshaft centerline, and the other below crankshaft centerline. Blanket must have 150 mm of overlap. Straps must be 50 mm wide with no more than 25 mm spacing between each strap.
   The maximum age of a shatter blanket is five (5) years if not limited to a shorter period by manufacturer. In cases of doubt, it is the competitors responsibility to prove the age of the blanket.
3. All pulling vehicles using an automatic transmission must be equipped with a positive reverse gear lockout.
4. All pulling vehicles using a flywheel and/or clutch assembly are required to use an ETPC approved item, producer must be on the manufacturers list of the ETPC Safety Program (see chapter 13 A). Only mechanically activated clutches are permitted. No electronic, pneumatic or hydraulic device that effects the clutch system allowed. Hydraulic engagement allowed.
   The ETPC will allow homemade flywheel and clutch parts under the following criteria:
   All non-ETPC Safety Program flywheel and/or clutch assemblies must fulfill the following minimum specifications:
   All parts must be made of steel plate or billet steel.
   POSITIVELY NO GRAY CAST IRON.
   Flywheel, pressure plate and pressure plate cover are allowed out of aluminum. Only wrought (billet) aluminum is adequate for pulling applications if mechanical properties are acceptable.
   A. Minimum mechanical properties (steel and aluminum):
      - Tensile strength 500 N/mm2
      - Yield strength 280 N/mm2
   B. Maximum peripherical speed (rotating speed on the **outer diameter of flywheel**/clutch component) is 200 m/sec. Is 125 percent of maximum working speed (safety for overspeed).

This means that maximum rotating speeds (working speed, at 1:1 engine/clutch rpm) are:

components max. 250 mm (10") diam.	= 12000 RPM
components max. 280 mm (11") diam.	= 10500 RPM
components max. 305 mm (12") diam.	= 10000 RPM
components max. 318 mm (12,5") diam.	= 9500 RPM
components max. 330 mm (13") diam.	= 9000 RPM
components max. 355 mm (14") diam.	= 8500 RPM
components max. 380 mm (15") diam.	= 8000 RPM
components max. 405 mm (16") diam.	= 7500 RPM
components max. 430 mm (17") diam.	= 7000 RPM
components max. 455 mm (18") diam.	= 6500 RPM
components max. 480 mm (19") diam.	= 6000 RPM
components max. 505 mm (20") diam.	= 5500 RPM

C. All cap-screws and bolts used in the clutch assembly and to connect flywheel to crankshaft must meet class 10.9 (grade 8) or higher. No welding and/or chemical milling allowed on any home made parts.

D. Drawings with measurements of all home made major components (flywheel, friction discs, floater plates, pressure plates and pressure plate cover) must always be with the pulling vehicle and be shown upon tech. inspectors request.
A copy of all drawings and the manufacturer report must be sent to and stored by the national Tech and Safety board.
Manufacturer report shall include:
- name of all components used, with specification of used material and the mechanical properties (max. yield strength, tensile strength etc.).
- material specification(s) with 3.1.b certificate, signed by producer.
- all components must have on paper (and stamped in by producer): identification number, producer name and date of production.
- name of pulling vehicle and type of engine(s).
- max. rotating speed of flywheel/clutch assembly allowed by producer.
- Manufacturers name (and contact name); address; telephone and fax numbers; e-mail address; name and signature of responsible supervisor; signing date and place; any other appropriate information.

If point A ,B, C and D above are fulfilled and according the rules national T&S board in cooperation with the ETPC T&S board may give permission to use named flywheel/clutch components. After written permission, components can be used in ETPC pulling events.

5. All Super Stock and Pro Stock and Limited Super Stock tractors are required to have an ETPC approved shatter blanket 430 mm wide and long enough to wrap around the bellhousing with at least 150 mm overlap; secured with six 50 mm wide nylon web straps with a steel D-ring on one end and sewn the length of the blanket (except for overlap area) and long enough to pass through D-ring and be tied in a saddle clinch; and with four 50 mm nylon web retaining straps each at the front and back of the blanket or an ETPC approved bell housing bolted to a steel engine plate, min. 5 mm thick, inside the original clutch housing.
6. Super Stock and Pro Stock and Limited Super Stock tractors factory-made out of components can also use an ETPC approved bell housing bolted to a steel engine-plate, min. 5 mm thick, instead of a blanket, in this application the use of a complete frame underneath the tractor is mandatory.
Note: For ETPC approved items see Chapter 13.
7. Straps to be separately fastened forward and to the rear of clutch/-flywheel assembly. All straps must be securely fastened and the blanket must be secured against the rear face of the block.
8. Fixes and/or changes, in whatever form, to shatter blankets may only be done by the manufacturer of the blanket.
9. The flywheel, clutch and pressure plate(s) and clutch protection on all vehicles in all classes must be yearly inspected and approved by a board member of the affiliated organisations of the ETPC before first pull in current season. Approved components will be marked with a stamp and are subject to inspection at all times. Clutch inspection forms and photos including certificates of passed X-ray/ultrasonic/Magnaflux test of welds in homemade bellhousings, certificates of conformity and age of shatter blankets, age documents of fire suits, cross section drawings of turbines, certificates of cables around engine block (for 6/8/10 or 12 mm cables) and current season's tech inspection forms have to stay with the pulling vehicle and be shown upon Tech Inspector's request.
10. All modified tractors, two wheel drive trucks and trucks are required to have a completely closed flywheel/clutch protection made of steel with the following minimum specifications A, B or C:

A. An ETPC approved factory-made bellhousing (must be permitted by NTPA).
Note: For ETPC approved items see Chapter 13.
A1. The inspection/maintenance hole in the protection shall not extend further forward at its top edge than flush with the cross-shaft hole. The length of the inspection hole shall be no more than 215 mm and it must not be more than 100 mm wide (measured in a straight line), and the hole shall be smoothly and fully radiused to produce an oval shape (see illustration 2-5).
A2. There shall be twelve (12) M8 grade 8.8 or better cap screws securing the cover the bellhousing. The cover must have a plate or fillet that is flush with the inside of the housing. The cover and fillet must be steel. The fillet must be flush to the inside.
A3. The bellhousing must be flush on the inside surface.
A4. Titanium bellhousings permitted by the NTPA are acceptable.
A5. ETPC approved bellhousings with a stand adjustment slot are acceptable (see illustration 2-6).
A6. Fixes and/or changes, in whatever form, to bellhousings may only be done by approval of manufacturer. Welding on factory-made bellhousings not allowed.

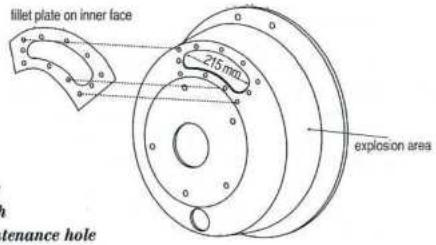

Illustration 2-5: bellhousing with inspection/maintenance hole

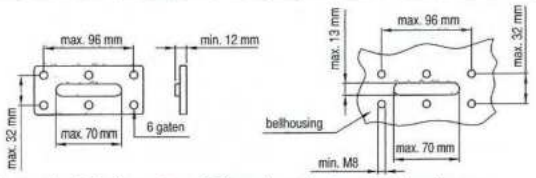

Illustration 2-6: dimensions bellhousing adjustment slot and cover

B. A homemade one-piece protection (minimum of 10 mm thick steel) is allowed on the following conditions:
   - B1. It must be subjected to Non Destructive Examination (NDE) using a radiographic, magnetic or ultrasonic method.
     NDE certificates of the welds must be available to prove they are of proper quality, otherwise an ETPC approved shatter blanket with a minimum width of 380 mm is required around this protection.
     Radiographic, magnetic or ultrasonic examination may be carried out by any company who can give a written certificate that the welding has been carried out properly.
   - B2. Protection must be flush on the inside surface.
   - B3. No inspection/maintenance hole or stand adjustment slot or any other opening allowed. Hole on transmission side must be min. 50mm. smaller than clutch diameter.
   - B4. Tube covering explosion (or rotating) area of clutch/flywheel combination must be seamless and flush on the inside.
   - B5. The ETPC recommends no grinding of the welds.

11. All bellhousings less than 10 mm thick (explosion area) must use a 4130 chrome molybdenum liner minimum 2.3 mm thick. Inner diameter of clutch protection not more than 50 mm larger than flywheel/clutch combination outer diameter.
12. Liner is secured to the bellhousing by drilling and tapping a single 6 mm hole through bottom of clutch can. Liner must cover rotating area of clutch/flywheel combination and must be flush on the inside surface. Stand adjustment slot in the liner is acceptable when it is smaller than it is in the bellhousing.
13. The ETPC recommends no openings in bellhousings.
14. All automotive type engines with bell housing and clutch will run a full block plate either a commercially available unit or minimum 5 mm steel or minimum 6,5 mm aluminum with five (5) M10 class 10.9 (3/8 grade 8) bolts and nuts (or better) evenly spaced on the bottom part of the bellhousing and four (4) additional M10 class 10.9 (3/8 grade 8) bolts and nuts (or better) between existing bolts on top half of bellhousing to fasten the bellhousing to the block saver plate.
15. No chemical milling allowed except when factory-made.
16. Aluminum bellhousing permitted in ETPC tractor pulling competition under the following criteria and specifications:
    1. Only NTPA permitted aluminum bellhousing are accepted by ETPC.
    2. Only aluminum bellhousing with four extra studs/bolts (one in each quadrant) used to secure the bellhousing to the engine-plate are permitted for ETPC pulling competition.
    3. All aluminum bellhousings must remain as constructed by the original manufacturer and cannot be modified.
       Any modification afterwards must have written approval of the ETPC Tech & Safety board
    4. Specs for using aluminum bellhousing in ETPC pulling competition:
    a. There must be a minimum of seven (7) 10 mm class 10.9 (3/8 inch, grade 8) bolts or better in the top half (180 deg.) of the bellhousing, evenly spaced.
    b. There must be a minimum of eight (8) 10 mm class 10.9 (3/8 inch,grade 8) bolts or better in the bottom half (180 deg.) of the bellhousing, evenly spaced.
       In max. two (2) of the above 15 holes a min. 10 mm dowel-pin may be used. Dowel pins must be separated by at least 5 bolt holes. No hollow dowel pins.
       Max. 180 mm between the bottom two holes, centerline to centerline.
    c. There must be four (4) additional motor plate studs/bolts (min. 12 mm grade 8.8 or better) in each quadrant of the bellhousing mounting flange.
       If hole in mounting flange is bigger than the used bolt, a bushing must be used.
       The four additional holes must be as produced by OEM.
    d. All bolts are used to attach the bellhousing to the block/engine plate.
    e. Inspection hole/clutch adjustment slot, starter pocket or other openings and scalloping of the mounting flange only be done by the manufacturer.
       Starter pocket must be formed or welded on only by manufacturer. Bolted starter pocket not allowed.
    f. Ventilation hole with maximum diameter of 51 mm permitted, only to be done by the manufacturer. Located on the rear part of the bellhousing, bottom side, not in the explosion area.
    g. If flange is scalloped, the outside diameter of the flange must be so that there is at least 10 mm material around each attaching hole.
       No scalloping of flange between the mounting holes.
    h. Aluminum bellhousing must be used with a steel or a wrought heat-treated aluminum alloy full block-plate (block-plate thick-

ness: see chapter 2 D-14 and 2 E-3 in the current ETPC rules).

i. Liners in aluminum bellhousing: following options possible:

a using two (2) liners: second additional liner same material and thickness as the OEM liner delivered with the OEM belhousing.

b using two (2) liners: second additional liner steel or titanium min. 2 mm thick with a min. tensile strength, ultimate Rm 670 Mpa and a min. elongation at break of 10%.

c using one (1) liner steel or titanium min. 4 mm. thick with a min. tensile strength, ultimate Rm 670 Mpa and a min. elongation at break of 10%.

d using one (1) OEM liner and a ETPC approved clutch-blanket around the bellhousing.

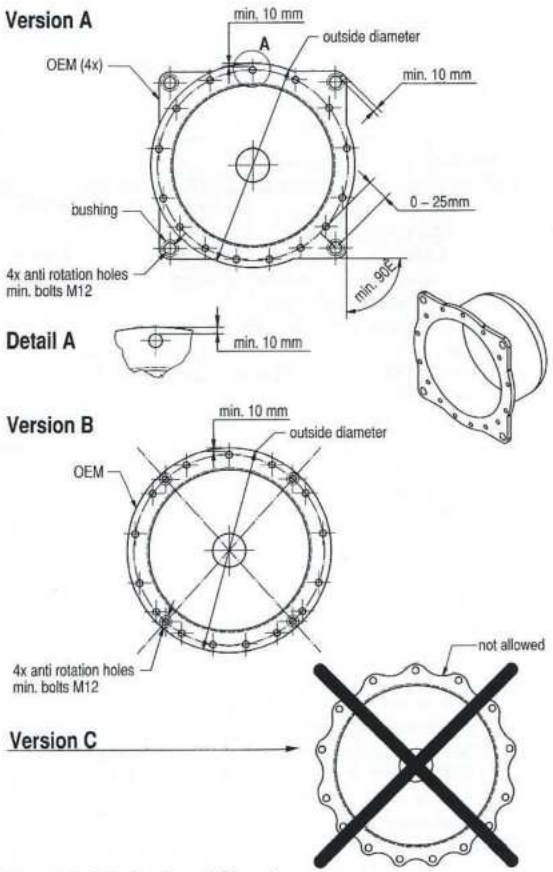

Illustration 2-7: aluminum bellhousing

E. Aviation, marine and industrial engines

1. On aviation, marine and industrial engines in truck and tractor pulling applications where a gearbox is used between the engine crankshaft and the clutch, clutch maximum peripherical speed as listed in chapter 2 D point 4B.
   - No torque converters are allowed behind the gearbox.
   - The shaft that accepts the flywheel must be made of solid billet steel, and min. 57 mm thick, to be heat treated 4140 steel, hardness 30 to 38 HRc, DIN 42CrMo4NC Mo 140, hardness 300 to 380 HB.
   - Clutches are limited to a maximum diameter of 11 inch (maximum 12,5 inch allowed if in the ETPC manufacturers list, see Chapter 13A in the current ETPC rules).
2. On aviation, marine and industrial engines in truck and tractor pulling applications with the clutch mounted on the crankshaft, the shaft or adopter which accepts the flywheel must be made of solid billet steel, with the same specifications as rule in E 1.
   - Nonproprietary clutches are limited to 11 inch.
   - ETPC approved clutches are acceptable to 12,5 inch.
3. Bellhousings or protections must be bolted to an engine plate with a minimum of twelve (12) M10 class 10.9 (3/8 inch, grade 8) bolts or better evenly spaced around bellhousing or protection.
   Engine plate to be 6 mm steel plate, or 10 mm aluminum plate.
   The plate to which the bellhousing is bolted must be securely fastened to the engine by at least eight (8) M10 class 10.9 (3/8 inch, grade 8) bolts. When using a gearbox between engine and bellhousing or protection, the plate to which the bellhousing is bolted must be securely bolted to the frame with at least eight (8) M10 bolts (four on each side of the frame).
   If using a single rail design, the 6 mm plate on the front of the bellhousing must be securely fastened to the frame with eight (8) M10 class 10.9 (3/8 inch, grade 8) bolts (four on each side of the frame).
   Any other alterations must be approved by the ETPC or affiliated board.
4. Onboard auxiliary power units (engines) used to charge the (main) engine during a pull not allowed (Hyper bar system).
   An onboard auxiliary power unit is only allowed for unhooked driving or start applications. Named units must be disconnected during the pulling attempt.

F. Turbine engines

1. Any turbine engine that exceeds 8000 rpm on the output shaft shall not be allowed to use a clutch/flywheel assembly, or an automatic transmission.
2. The exhaust pipe on any turbine must extend a minimum of 150 mm above the top of the exhaust opening (see illustration 2-8).

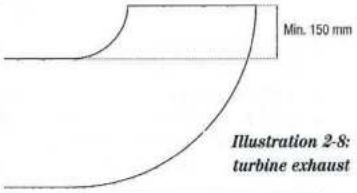

Illustration 2-8: turbine exhaust

3. No turbine engine will be operated beyond original manufacturers temperature and rpm limits and no exceeding of manufacturers maximum governor specifications is allowed.
4. All turbine air intakes shall be screened with metal screen having openings no larger than 5 mm in diameter.
5. All turbine engines must have a minimum of 10 mm steel shroud, those in excess of 1500 horsepower a minimum of 12 mm, steel shroud that surrounds the engine with all joints securely fastened. The steel shroud must incorporate a minimum of 6 mm thick flanges that extend radially inward a minimum of 25 mm on both ends of the shroud. A minimum of 12,5 mm gap between the engine and the inside diameter of the flange must be maintained for air circulation inside the shroud.
6. Turbines without the above-mentioned steel shrouding require a steel/aramide protection:
   - internal steel shroud of min. 0.5 mm (or min. 2 mm aluminum) as close as possible around the engine.
   - 30 layers of 328-weave Kevlar 29 (or Twaron with the same specifications).
   - the protecting blanket must be long enough to wrap around the engine with at least 150 mm overlap and be secured with nylon straps underneath the engine.
   - blanket must be installed around the engine in the rotation direction of the turbine-wheels.
   - turbine blankets must be completely covered with min. nine (9) straps.
   - straps must be stitched side by side on to the blanket surface cloth (bag). Straps must be at least 50 mm wide and have a min. strength of 25.000 Newton.
   - first and last strap max. 10 mm from side of blanket.
   - Total strength of straps must be at least 200.000 Newton.

7 a. All turbine shieldings must extend a minimum of 130 mm and 250 mm aft of the turbine section. With engines where the shielding cannot be fitted in the above size because of exhaust pipe position the required standard should be reached as close as possible (i.e. the minimum lengths for a RR Gnome: 45 cm, Isotov TV2: 58 cm, Isotov TV3: 51 cm, Turbomeca Turmo III: 53 cm and Lycoming T53-L-11: 48 cm).
Engines with a return free power shaft through the engine must have an extra connection from engine to exhaust pipe section. A technical description of this connection must be approved by the ETPC Tech and Safety Board.

7 b. In case of a housing breakage in the hot part of the turbine there must be a provision that supports the engine, this holding appliance may not transfer strength on the turbine under normal operation.

8. Exhaust stack diameter to be no smaller than 25,4 mm of engine outlet.
9. Rotation speed signal must be detected on turbine shaft closest possible to the engine, rotation speed signal detection on powered shafts or gearboxes is not allowed.
This is for all serial and additional speed control devices.

Two separate overspeed protection devices for power turbine wheel(s) are required.
A yearly boroscopic inspection of the hot section of each installed turbine must be performed by ETPC Turbine Tech Team before the first pull in the current season.

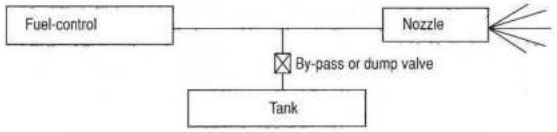

Illustration 2-9: overspeed shutdown on turbine-engines

9.1. Overspeed shutdown consisting of speed monitor activating a normally closed solenoid valve located between fuel control and fuel manifold is required.
Trip setting to be low enough to prevent overspeed in event of driveline failure.
Each turbine must have two independent fuel-shut-off valves.
Alternatively, this device can be an additional by-pass valve, which is mounted between fuel control and the fuel nozzles in the burners. The by-pass valve must be large enough to allow the maximum fuel consumption quantity to go into the tank with low pressure. On turbines with two fuel stages, the by-pass valve has to be mounted in the first stage.

9.2. Original (helicopter, aircraft etc.) power turbine speed limiter/-constant power turbine speed governor and/or factory-mounted overspeed shutdown.

10. No homemade turbine engines are allowed. I.e. rebuilding, assembling or overhauling of turbine engines may only be done by certified turbine repair facilities, this is definitely NOT a do-it-yourself job.

11 a. No Lycoming T-55-L-11 or TF-35 or Napier Gazelle turbines allowed as competition engines.
b. One-shaft turbine engine(s) not allowed for tractor pulling.
c. Turbine engines over 2500 HP Take Off power not allowed in tractor pulling, for NTPA listed turbine engines an exception can be possible.

12. Teams planning to build or to import turbine-powered pulling vehicles must send the technical information, including a cross-section drawing and the logbook(s) of the turbine engine(s) to the Technical Committee of their national organisation and the ETPC Tech and Safety Board.
13. Any new turbine vehicle must be approved before it is allowed to compete at any level at any event. This also applies to an existing vehicle fitted with different or other types of turbines than the ones that were fitted originally.
14. Turbine engines are subject to spot checks during any pulling event. The following inspections must be made before a turbine vehicle is allowed to compete:
a. overspeed
b. the shielding of the turbine wheels

c. the position of the shut-down solenoid
d. the engine(s) must be started and the kill switch tested
e. a yearly boroscopic inspection of the hot section of each installed engine must be performed by ETPC approved turbine inspector before the first pull in the current season.

15. It is highly recommended to warm up turbine motors before pulling.
16. Each turbine team must always keep an engine registration book with the tractor. This book will be provided by the ETPC and is made by the Turbine Tech Team in co-operation with the pulling team. This book contains:
    - engine main performance
    - governor speed settings
    - description of overspeed protections
    - maintenance schedule
    - engine trend check record (filled in by the team)
    - engine operating time record (filled in by the team)
    - calendar of inspection schedule (filled in by the team)

    This book must always be shown upon request to the ETPC Tech and Safety Board or the ETPC Turbine Tech Team.
    Data log system logs are allowed as trend check and operating time records.
17. For safety reasons, all vehicles are highly recommended to use auxiliary power for all unhooked driving. The following conditions apply to turbine vehicles wanting to drive unhooked on direct turbine engine power:
    a. unhooked driving is only allowed when using max. 200 HP with the engines, the remaining engines may be started only after the vehicle has been hooked to the sled.
    b. the following areas must be checked and inspected before the vehicle in question is allowed to compete:
       * a stand-still test must take place: the driver must be able to hold the tractor immovable with all engines running in gear at normal idle speed.
       * the driveline brake (free power brake): a check for cracks must be done. Any failure or malfunction or any other technical problems on the brake system(s) will automatically mean disqualification for that day.
18. Turbine engines may start in gear only after hooked to the sled.
19. Turbine vehicles are allowed to have starter motor onboard, or an auxiliary power unit to be carried onboard and running during a pulling attempt, but the named units must be disconnected from the drive train during the attempt.
20. The use of steel brake calipers instead of aluminum is highly recommended by the ETPC.

G. Driveline and Driveline shielding

A. General

1. Drivelines should be guarded with 8 mm steel or 10 mm aluminum.
2. All modified and minipuller engine/automatic transmission combinations must have two front motor mounts, two rear motor mounts and a support saddle for rear of transmission, with 13 mm maximum clearance;

or two front motor mounts, support saddle at rear of engine with 13 mm clearance and a mount at rear of transmission (this is to prevent engine or transmission from dropping if breakage occurs).
3. The use of universal joints in drivelines is forbidden in all classes except trucks.
4. Drive-shafts longer than 1270 mm must be fitted with safety-loops made out of steel (8 mm) or aluminum (10 mm). Two safety-loops per part of the driveshaft, to be securely connected to the frame.

B. Driveline shield tethering for all classes (also for Modifieds <950 kilo)

1. Only for shields over 40 cm in length.
2. All driveline shield components must be tethered on each end by two opposing restraints. Tethers must attach at 180 degrees of each other and a minimum of 75 mm and a maximum of 150 mm from each end of each driveline shield component.
   Note: Modifieds can tether back to chassis where applicable.
3. Tether to be constructed of a minimum of 50 mm wide by minimum 2.38 mm thick nylon or polyester strap. One end of tether must attach to one side of the chassis, then go around the driveline shield, then attach to the other side of the chassis. Tether must be attached to chassis by a minimum of one (1) M10 grade 8.8 bolt with a grommet on each side or wrap around the chassis and use a buckle to fasten it to itself.

C. Driveline Brake Shielding

1. Maximum peripheral speed (rotating speed on the outside edge of disc) for any driveline brake is 200 m/s (meters per second).
   This means that the allowed maximum speeds are as follows:

Discs with 280 mm (11") diameter:	13500 rpm
Discs with 305 mm (12") diameter:	12500 rpm
Discs with 330 mm (13") diameter:	11500 rpm
Discs with 355 mm (14") diameter:	10500 rpm

   The maximum disc speed must be calculated from the formula: (max. engine rpm) multiplied by (reduction ratio). With turbine engines, the formula is: (max. free power rpm + 20%) multiplied by (reduction ratio). Turbine tractor teams must show the engine manufacturers original manual with all technical specifications including rpm upon Tech Inspectors request.
2. All driveline brakes with max. 280 mm (11") disc must be shielded with at least 10 mm steel, 360 degrees around all brake components (including caliper), and both ends must be closed with 4 mm, or thicker, steel.
3. All driveline brakes with a disc larger than 280 mm (11") must be shielded with at least 12 mm steel, 360 degrees around all brake components (including caliper), and both ends must be closed with 4 mm, or thicker, steel.
4. The maximum driveline brake diameter is 355 mm (14"). Rotating brake parts must be made out of mild steel (no alloy steel allowed) with the following minimum properties:
   tensile strength 414 N/mm2, yield strength 275 N/mm2.
5. The diameter of the disc center hole must be at least 200 mm

smaller than the outside diameter of the disc.

6. Shields consisting of two parts may only be used on the following conditions (drawing see Chapter 2, par. D, rule 10, alternative C in this book):
   - no inspection holes
   - the top part of the protection must be securely fastened to the frame
   - the bottom part of the protection must be securely fastened to the top part with M12 grade 8.8 bolts with a minimum of three (3) bolts on each side and a max distance of 40 mm between each bolt
   - the connection must be flush on the inside surface
   - any other alterations must be approved by the ETPC Tech and Safety Board.

   It is also allowed to use a one piece bellhousing as protection of driveline brakes as defined in Chapter 2, par. D, rule 10, alternatives A and B in this book).
7. The ETPC highly recommends brake calipers made of steel instead of aluminum, as well as locating them in the bottom part of the driveline brake housing.

D. Crossbox Shielding

1. All new crossboxes are required to have a min. 10 mm billet aluminum or 8 mm steel thickness around circumference of rotating gears.
2. Any older crossbox less than min. specified thickness may use the following shielding methods to achieve total thickness requirement:
   a. wrap crossbox radially 360 degrees with webbed , tow strap type material to achieve min. 10 mm total thickness of crossbox.
   b. wrap crossbox radially 360 degrees with steel strap to achieve min. 10 mm total thickness of crossbox. Strap to be min. 4 mm steel.

H. Chassis

1. Modified tractors with frame bolted to transmission: the frame shall also be bolted to axle housing to prevent splitting of vehicle. This must be of sufficient strength to support the weight of the tractor in the heaviest class being entered with bolts removed from the plate of transmission or rear end.
2. All tractors shall have wide front axles. Front wheels shall track with the rear wheels.

   All pulling vehicles must have skid-plates under the front part of the chassis/frame to keep vehicle on the track in case of losing a front wheel.

   Skid plates for vehicles >950 kg must be one of the two types listed below:

   a. Skid-plate mounted in line with each frame rail (on both sides) at the front, equal in strength to frame rail material.

      Skid-plate surface to be a min. of 100 mm wide and 300 mm long with a min. 150 mm curve measured from the front most part of rolled edge.

   or b. Skid-plate mounted to center at the front, must be a min. of 300 mm wide with rolled edge front. Plate must be min. 200 mm length.

   Skids must be securely mounted and braced to the front axle or chassis in front of the axle.

   Skids must be able to support the weight of the tractor when a 'hard landing' occurs. Tractor must slide forward and not 'dive' in the track when wheel(s) is (are) lost.

   Maximum ground clearance for skid-plates is, the same distance as from the bottom of the wheel rim to the ground, with front tires in normal operating position.
3. The frame must be out of one piece from rear axle to front axle.

I. Engine shielding

1. A deflection shield is required on both sides of all engines. Shield must extend the complete length of engineblock and be securely fastened. It is to be made of aluminum or steel, minimum thickness 2 mm. On modified tractors with turbocharged diesel engine(s), a 2 mm steel/aluminum protection behind the engine(s) is mandatory.

   Shields must be solid. Motor mounts, filters, steering rods, etc., cannot serve as part of shield. Solid frame rails with no holes can serve as part or all of shield, providing it covers required areas of engineblock. It is recommended that a quick release fastener be used (winged Dzus type or cotter pin type hood pins). Use of bolts with nuts, screw locks are discouraged (reason: ease of access in case of emergency-fire, run off, etc).

   Shielding on all Super Stock and Pro Stock and Limited Super Stock inline engines must be from sheet metal (hood) to 50 mm below bottom center of crankshaft throw, and be securely fastened. They may be louvered, but no expanded metal. Fastening of hood and side shielding must be strong enough to keep them in place in case of an explosion.
2. All tractors with an inline engine are required to have an additional inner side shield consisting of 3 mm thick steel or titanium or 6 mm aluminum inside the current 2 mm steel/aluminum side shields with a minimum of 12 mm air gap. The shield is independent of the current side shields and must be attached to the vehicle chassis (frame) with a minimum of 8 mm fasteners at both ends and center on the bottom.

   At deck-height the shield can be bolted solid with 8 mm fasteners or using a min. 8 mm chain to the engine-block at both ends.

   This shield must extend from the bottom of the head (top of block) and extend to 50 mm below bottom-center throw of crankshaft.

   Shield must extend full length of the block on both side of the engine.
3. Starter motors, fuel filters, oil filters and fuel injection pumps may not be used as shielding. Shielding may cover or pass behind starter or fuel pump.
4. Shielding on all V- or Y-type engines (including marine, aircraft, super stock and pro stock types) must extend from base of head or

the uppermost point of piston, travel to 50 mm below bottom center of crankshaft throw, and be securely fastened.

5. Piston powered aircraft, industrial or marine engines must have a minimum of 3 mm thick shield. This may be in one or two layers.
6. Side shields must be mounted independently of the engine block. Motor mount, block saver plate and header mounting, or chassis mounting is acceptable.
7. Shielding on modified tractors using in-line engines shall be from the bottom of head (top of block) and extend to 50 mm below bottom center throw of crankshaft.
8. On multiple engined tractors with in-line engines if starter ring is used between engines, the starter ring must be covered 360 degrees, and both ends closed with 6,5 mm steel or greater to be securely fastened.
9. All engines equipped with a harmonic balancer, balancer shall be solid steel, to be of the following minimum mechanical properties: tensile strength: 500 N/mm2, yield strength: 280 N/mm2.
   Shrouded 360 degrees with 10 mm steel to be no more than 25 mm away in any direction of rotation and to be securely fastened. Harmonic balancers shall be connected with a steel bolt grade 8.8 on the crankshaft. Instead of the above, a high performance harmonic balancer may be used.
   All sorts of balancers must have a steel shield or restraint to prevent the balancer from being thrown out of the tractor.
10. All engine-fans must be shrouded 360 degrees, with steel 2 mm or thicker, electric fans excluded.
11. All other rotating engine-parts must be shielded with min. 2 mm steel.
12. On radial engines the cylinder heads must be 360 degrees covered with a shielding of min. 5 mm thick aluminum, wide enough to cover the cylinders.
13. All turbocharged engines must have one steel cable totally surrounding the engineblock and head. This cable must be placed between first and second cylinder (from front of tractor) through exhaust-port area.
    a. Cable must be min. 12 mm thickness (with certificate from manufacturer: min. 110kN breaking force). If 12 mm cable cannot be placed, two 8 mm cables (same length) with min. 60kN breaking force each are allowed.
    b. Cable ends must have a factory-made loop and connected together with D-lock. D-lock must have min. same strength as the used cable.
    c. Cable must have approximately 100 mm of slack.

    Diesel engines with single-type cylinder heads need a steel bar with a minimum thickness of 12 mm, this steel bar must extend from first to last cylinder head and be connected to each cylinder-head.
14. Air cooled Continental engines must have cable to connect cylinder-heads to engine-block:
    - All cylinder-heads must have steel eye to connect the cable.
    - Cable must be connected to the block on back and front.
    - Min. 8 mm cable and min. 8 mm fasteners.

J. Engine throttles

1. All pulling vehicles must be equipped with a deadmans throttle. All throttles working in a forward-rearward direction shall be closed in the rearmost position. Must be positive, two way, mechanical linkage. All foot throttles must have a toe strap. No hydraulic throttle linkage allowed.
2. All injection or butterfly shafts on engines must have dual return to idle arms and springs, one on each side. All diesel engines will have a visible return-to-idle spring on fuel injection pump lever.
3. No computers allowed that control any mechanical operation of the competing vehicle. RPM-limiters are exempt of this rule.
   No automated or computer controlled or operated traction control devices.
4. Computer controlled electronic fuel management allowed.

K. Exhaust systems

1. All exhaust pipes must discharge vertically. Height to be a minimum of 205 mm above the bend in the pipe which discharges vertically measured from the top of the pipe to bottom of bend (see illustration 2-10).
   All exhaust pipes must be securely attached.
   Vertical is defined as being within 10 degrees, in any direction of being in plumb. Rain caps are not allowed. No megaphone pipes are allowed. Venturi type headers are acceptable.

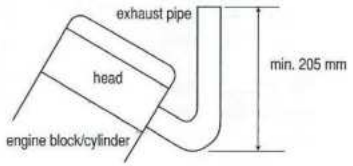

Illustration 2-10: dimensions exhaust pipes

2a. Turbocharger protection; diesel engines

Turbochargers are divided into three categories according to exhaust outlet dimensions:

A.- turbocharger exhaust outlet up to 95 mm diameter (2 mm shielding).
B.- turbocharger exhaust outlet above 95 mm and up to 114 mm diameter (2 mm shielding).
C.- turbocharger exhaust outlet above 114 mm diameter (3/6 mm shielding).

A. Turbocharger with exhaust outlet up to 95 mm diameter:
   - All turbochargers must be completely shrouded (360 degrees), except for inlet- and exhaust and oilsupply pipes with 2 mm steel.
   - Any openings in the guarding around inlet/exhaust/ oil supply pipes can have a maximum of 25 mm clearance to the guarding (see illustration 2-11 on the next page).

- Front (inlet) and rear (exhaust) end of guarding must be closed with 2 mm steel. The guarding must ensure that no wheels or other parts of the turbocharger can come out in case of a turbocharger explosion.
- The guarding must be mounted as close as possible to the turbocharger, at minimum four (4) points with minimum M8 8.8 bolts. (Connection to inlet or exhaust pipe is not seen as connection point).
- Around every bolt hole must be minimal 1.5x hole diameter of material.
- Guarding must extend until cross in exhaust.
- Hood construction or grille cannot be part of the shielding.
- For tractors with a closed hood construction (minimum 2 mm steel or minimum 3 mm aluminum), an open bottom to guarding with max. 90 degrees of the radial part is allowed.
- Open bottom shielding must extend at least 50 mm below the bottom of the turbocharger. (see illustration 2-12)

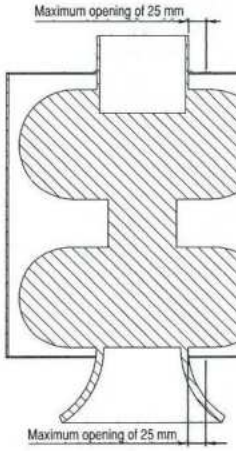

Illustration 2-11: Clearance to the guarding

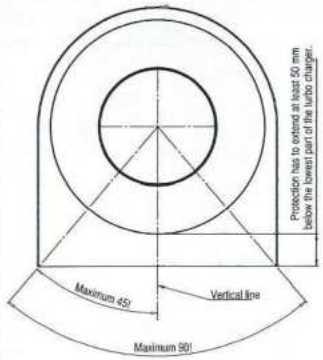

Illustration 2-12: open bottom shielding

If turbo protection is made out of separate parts welds must be full length or 360 degrees round.
In case of a bolted construction
- There must be minimal M8 8.8 bolts used, placed at maximum of 75 mm centres.
- Distance from bolt location to edge of the shielding or plate maximum 25 mm.
- Around every bolt hole must be min. 1.5x hole diameter of material.

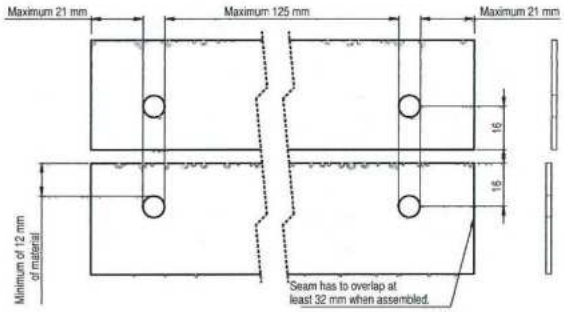

Illustration 2-13: material-overlap in bolted shielding

- Minimum overlap of material 32 mm. (see illustration 2-13)

Exhaust pipe must have a steel cross as close as possible to the turbo exhaust housing outlet, but maximum 50 mm from turbo exhaust wheel.
- Cross to be made from minimum 10 mm diameter steel pin (Compact diesel: minimal 8 mm diameter) .
- Pins to be installed 90 degrees to each other, as closes as possible to each other.
- If exhaust pipe has a diameter larger than 95 mm there must be a third pin of 10 mm, maximum 50 mm from cross (pin every 60 degrees).
- If exhaust pipe has a diameter larger than 160 mm there must be a fourth pin of 10 mm diameter maximum 50 mm from cross (pin every 45 degrees).
- Maximum diameter of exhaust pipe allowed is 200 mm.
- Pins must have 5 mm visible on the outside of the exhaust pipe and be welded to the pipe.
- From cross to turbo exhaust wheel there must be an axial stud minimum 12 mm diameter welded to the cross. (see illustration 2-14)
- Maximum distance between axial stud and turbo exhaust wheel is 2 mm.
- Wall thickness of exhaust pipe from turbo to cross min. 4 mm.

Stud for axially securing the turbo shaft in case of a turbo crash.

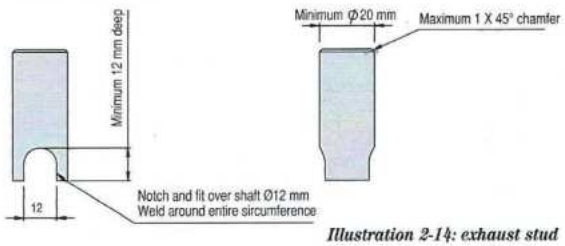

Illustration 2-14: exhaust stud

If it is not possible to use the 10mm pins, 25x5 mm flat steel may be used as the cross.

- This cross must also follow the above rules concerning the stud and the 5 mm visible on the outside plus the welding's on the outside, and 3th and 4th flat steel by bigger diameter pipe.
- Flat steel can only be used after written approval of the National and the ETPC T&S board.

Exhaust pipe must have three (3) additional connections to the exhaust protection to prevent pipe coming loose from turbo (if clamp fails or breaks)

- Connections made from min. 25x5 mm flat steel inside the turbocharger guarding.
- 25x5 mm flat steel to be connected with minimum M8 8.8 bolts to guarding
- Around every bolt hole must be minimal 1.5x hole diameter material. (see illustration 2-15)

TEXT CONTINUES ON PAGE 34

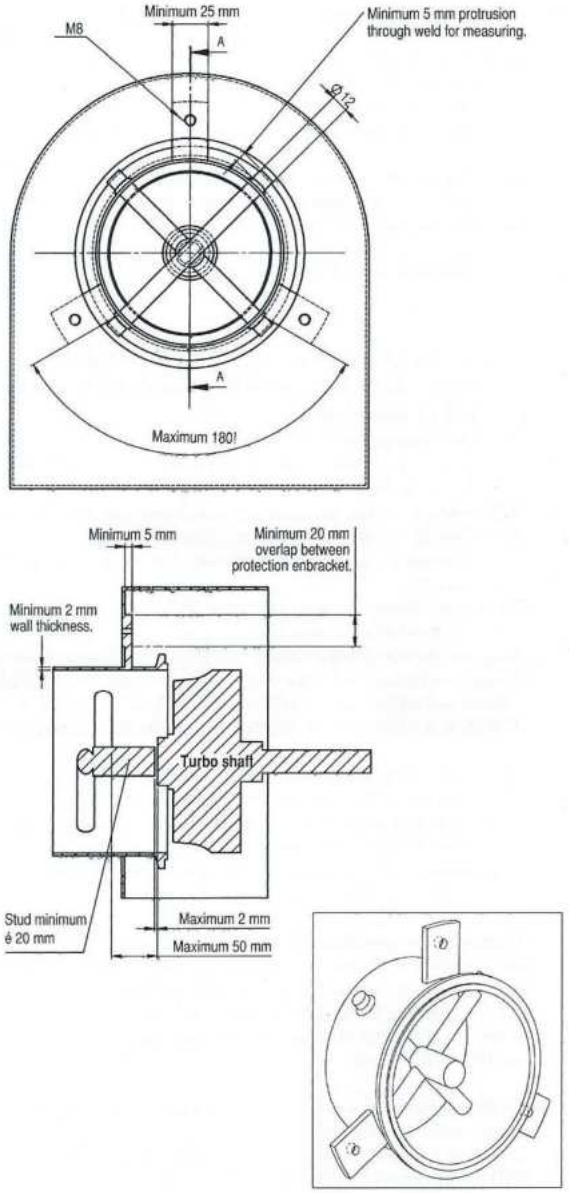

Illustration 2-15: additional connections exhaust pipe

B. Turbocharger with exhaust outlet above 95 mm and up to 114 mm diameter:
As per rules for turbochargers with exhaust outlets up to 95 mm (as discribed in A) but with the following differences:
- Cross pins to be made from 12 mm diameter (not 10 mm)
- Axial stud to be made from 20 mm diameter (not 12 mm)

C. Turbochargers with exhaust outlet above 114 mm diameter
As per rules for turbochargers with exhaust outlet up to 95 mm (as discribed in A) but with the following differences:
- Cross pins to be made from 12 mm diameter (not 10 mm)
- Axial stud to be made from 20 mm diameter (not 12 mm)

By one stage turbocharged diesel engines the following stronger shielding (exhaust outlet above 114 mm diameter):

- All turbochargers must be completely shrouded (360 degrees), except for inlet, exhaust and oil supply pipes with 3mm steel. (radial part: pipe or rolled steel section)
- Any openings in the guarding around inlet/exhaust/oil supply pipes can have a maximum of 25 mm clearance to the guarding.
- The turbocharger guarding must also cover the first cross in the exhaust outlet.
- Axial: front (inlet) and rear (exhaust) end of guarding must be closed with 6 mm steel (not 3 mm).
- Guarding may be divided axially, on these separate axial parts a 6 mm plate must be full welded and then bolted together with the second part with minimum M8 8.8 bolts, with maximum distance bolt to bolt of 50 mm. Minimum 5.5 mm material around bolt hole.
- Around the exhaust pipe there must be a fixed ring or plate of min. 6mm thick. The ring must be connected on the inside of the rear end of guarding. Ring or plate must have 30 mm larger diameter than the hole in rear part of guarding, this is to prevent the exhaust and cross with axial stud is coming loose from turbocharger. (see illustration 2-17 on page 36)

If turbocharger guarding cannot be made according specifications above, engine or chassis may be part of guarding and endplates may be in two (2) sections, in case of a short elbow in the exhaust pipe the guarding may be lengthened so that the elbow is included in the guarding; this only after written approval of the National and ETPC T&S board.

If turbo protection is made out of separate parts welds must be full length or 360 degrees round.
In case of a bolted construction there must be minimum M8 8.8 bolts used, placed at maximum of 75 mm centres.
- Distance from bolt location to edge of the shielding or plate maximum 25 mm.

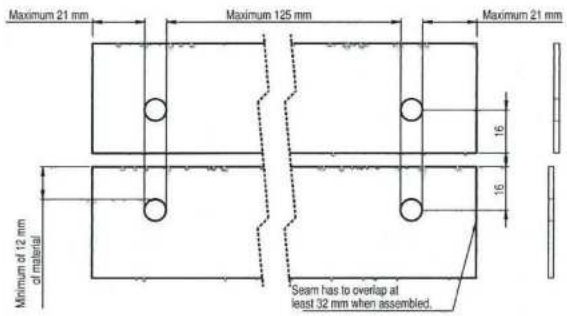

Illustration 2-16: material-overlap in bolted shielding

- Around every bolt hole must be minimum 1.5x hole diameter of material.
- Minimum overlap of material 32 mm. (see illustration 2-16)

Above turbocharger shielding must be yearly inspected. Inspection paper and photo must be filed and a copy must be with the vehicle at all times for inspection.

Dimensions and instructions for guarding >114 mm
(see also illustration 2-20 on page 37)
- 360 degrees protection. radial 3 mm, axial 6 mm wall thickness. Made out of steel.
- Protection may only be seperated in axial direction.
- Minimum 5.5 mm of material around each bolt hole.
- All joints must be secured with at least fifteen (15) M8 8.8 bolts. Maximum distance between bolts, 50mm.
- Only at the point where the protection is interrupted for an intake or exhaust pipe, the distance between the bolts may be bigger. The maximum distance between the first bolt of the joint and the opening for an intake or exhaust pipe shall not exceed 21 mm.
- There shall be no openings bigger than 25 mm between the protection and the intake or exhaust pipe's.

(see also illustration 2-17 on page 36)

TEXT CONTINUES ON PAGE 37

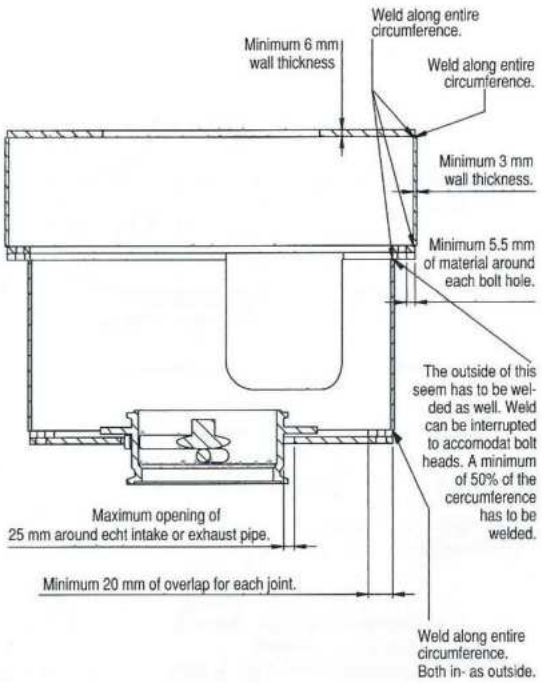

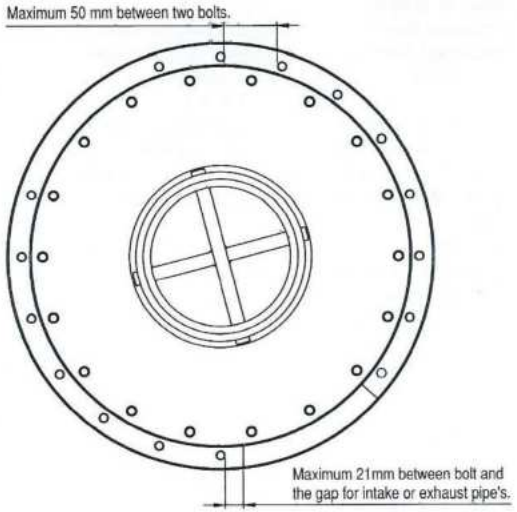

Illustration 2-17: dimensions and instructions for guarding > 11¼ mm

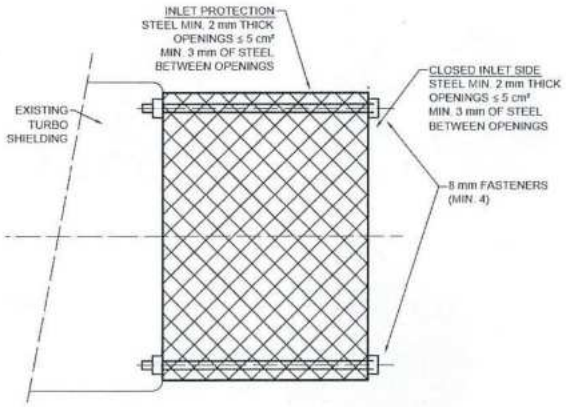

Illustration 2-18: Turbo Inlet Protection

Turbo inlet protection: A and B:

. Inlet protection A:
All turbo charged diesel engines must have an inlet protection to prevent turbo inletwheel or other parts from coming out.
Protection A must consist of:
- steel turbo intake cage min. 2 mm thick, having openings no larger than 5 cm2.
- around this openings there must be minimum 3 mm steel.
- the air intake cage must be mounted as an extension of the turbo protection, securely mounted to the turbo protection with min. four (4) 8 mm fasteners.
- in addition, further mounting points can be used on the engine or frame with min. 8 mm fasteners.
- this intake cage to be seen as a screen-tube fully closed except the inlet side, open inlet side mounted to existing turbo protection. (see illustration 2-18)

. Inlet protection B:
To contain the smaller particles in the event of a turbo failure.
Protection B must consist of:
- An additional fine screen (min 2 mm thick steel or aluminum) around the above mentioned protection A, with openings no larger than 10 mm.
This protection B can be left out under the following conditions:
- when the cage of protection A is having openings no larger than 10 mm instead of the 5 cm2.
- when protection is inside a fully closed engine hood that contains the smaller particles. Any openings or plastic grille etc. must be closed with a min. 2 mm. thick steel or aluminum screen having openings no larger than 10 mm.

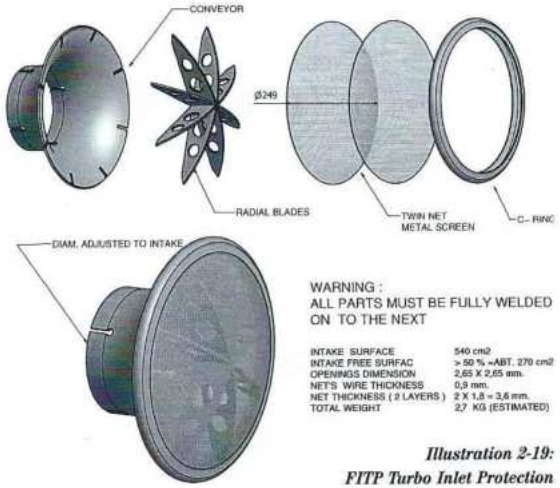

Illustration 2-19:
FITP Turbo Inlet Protection

To prevent that hood opens in the event of an explosion, hood must have a solid connection to the frame, with min. four (4) 8 mm fasteners.
FITP inlet protection allowed as turbo inlet protection. (see illustration 2-19)

2b. Turbocharger protection for all turbocharged engines used in tractor pulling (except diesel engines).

Turbochargers are divided into 3 categories according to exhaust outlet dimensions:

A.- turbocharger exhaust outlet up to 95 mm diameter (2 mm shielding)
B.- turbocharger exhaust outlet above 95 mm and up to 114 mm diameter (2 mm shielding)
C.- turbocharger exhaust outlet above 114 mm diameter (2 mm shielding)

A. Turbocharger with exhaust outlet up to 95 mm diameter

- All turbochargers must be completely shrouded (360 degrees), except for inlet- and exhaust- and oil supply pipes with 2 mm steel.
- Any openings in the guarding around inlet/exhaust/oil supply pipes can have a maximum of 25 mm clearance to the guarding. (see illustration 2-20 on the next page)
- Front (inlet) and rear (exhaust) end of guarding must be closed with 2 mm steel.
- The guarding must en-sure that no wheels or other parts of the turbocharger can come out in case of a turbocharger explosion.

- The guarding must be mounted as close as possible to the turbocharger, at minimum four (4) points with minimal M8 8.8 bolts. (connection to inlet or exhaust pipe is not seen as connection point)
- Around every bolt hole must be minimal 1.5x hole diameter of material.
- Guarding must extend until cross in exhaust.
- Hood construction or grille cannot be part of the shielding.
- For tractors with a closed hood construction (minimum 2 mm steel or mininum 3 mm aluminum), an open bottom to guarding with max. 90 degrees of the radial part is allowed.
- Open bottom shielding must extend at least 50 mm. below the bottom of the turbocharger. (see illustration 2-21)

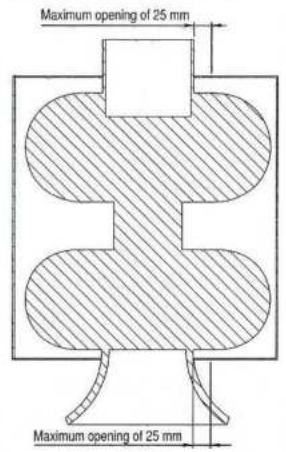

Illustration 2-20:
Clearance to the guarding

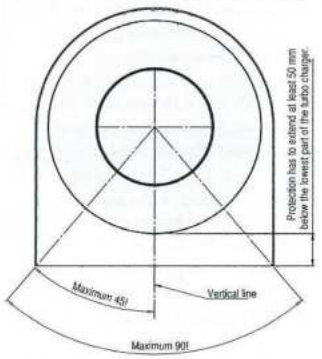

Illustration 2-21: open bottom shielding

If turbo protection is made out of separate parts welds must be full length or 360 degrees round.

- In case of a bolted construction there must be mininimal M8 8.8 bolts used, placed at maximum of 75 mm centres.
- Distance from bolt location to edge of the shielding or plate maximum 25 mm.
- Around every bolt hole must be minimum 1.5x hole diameter of material.
- Minimum overlap of material 32 mm. (see illustration 2-22 on page 39)

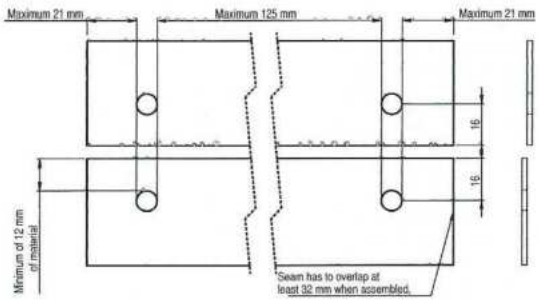

Illustration 2-22: material-overlap in bolted shielding

Exhaust pipe(s) to open air must have a steel cross as close as possible to the turbo exhaust housing outlet, but maximum 50 mm. from turbo exhaust wheel. If exhaust wheel is 50 mm or deeper in the turbo, distance may be longer than 50mm.

- Cross to be made from minimum 10 mm diameter steel pin. (compact diesel: minimum 8 mm diameter).
- Pins to be installed 90 degrees to each other, as closes as possible to each other.
- If exhaust pipe has a diameter larger than 95 mm there must be a third pin of 10 mm maximum 50 mm from cross (pin every 60 degrees from middle).
- If exhaust pipe has a diameter larger than 160 mm there must be a fourth pin of 10 mm diameter maximum 50 mm from cross. (pin every 45 degrees from middle).
- Maximum diameter of exhaust pipe allowed is 200mm.
- Pins must have 5 mm visible on the outside of the exhaust pipe and be welded to the pipe.
- From cross to turbo exhaust wheel there must be an axial stud minimum 12 mm diameter welded to the cross.
- Maximum distance between axial stud and turbo exhaust wheel is 2 mm. (see illustration 2-23)
- Wall thickness of exhaust pipe from turbo to cross min 4 mm.

Stud for axially securing the turbo shaft in case of a turbo crash.

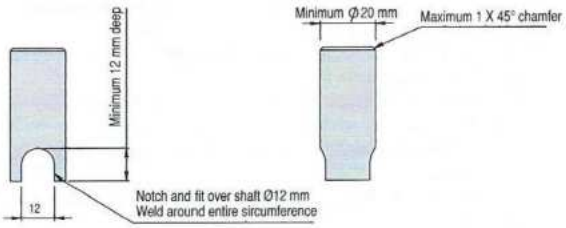

Illustration 2-23: exhaust stud

If it is not possible to use the 10 mm pins, 25x5 mm flat steel may be used as the cross.

- This cross must also follow the above rules concerning the stud and the 5 mm visible on the outside plus the welding's on the outside, and 3th and 4th flat steel by bigger diameter pipe.
- Flat steel can only be used after written approval of the National and the ETPC T&S board.

Exhaust pipe must have two (2) additional connections to the exhaust protection to prevent pipe coming loose from turbo (if clamp fails or breaks).

- Connections made from minimum 25x5 mm flat steel inside the turbocharger guarding.
- 25x5 mm flat steel to be connected with minimum M8 8.8 bolts.
- Around every bolt hole must be minimal 1.5x hole diameter material. (see illustration 2-24 on page 42)

B. Turbocharger with exhaust outlet above 95 mm and up to 114 mm diameter:
As per rules for turbochargers with exhaust outlets up to 95 mm (as discribed in A) but with the following differences:

- Cross pins to be made from 12 mm diameter (not 10 mm)
- Axial stud to be made from 20 mm diameter (not 12 mm)
- Exhaust pipe(s) to open air must have a steel cross as close as possible to the turbo exhaust housing outlet, but maximum 50 mm. from turbo exhaust wheel.

Exhaust pipe must have three (3) additional connections to the exhaust protection to prevent pipe coming loose from turbo (if clamp fails or breaks).
Cconnections made from minimum 25x5 mm flat steel inside the turbocharger guarding.

- 25x5 mm flat steel to be connected with minimum M8 8.8 bolts.
- Around every bolt hole must be min.1.5 x hole diameter material. (see illustration 2-24 on page 42)

C. Turbochargers with exhaust outlet above 114 mm diameter:
As per rules for turbochargers with exhaust outlet up to 95 mm (as discribed in A) but with the following differences:

- Cross pins to be made from 12 mm diameter (not 10 mm)
- Axial stud to be made from 20 mm diameter (not 10 mm)
- Exhaust pipe(s) to open air must have a steel cross as close as possible to the turbo exhaust housing outlet, but max. 50mm. from turbo exhaust wheel. Rear plate guarding exhaust side must be 4 mm (not 2 mm).

Exhaust pipe must have three (3) additional connections to the exhaust protection to prevent pipe coming loose from turbo (if clamp fails or breaks).

- connections made from minimum 25x5 mm flat steel inside the turbocharger guarding.
- 25x5 mm flat steel to be connected with minimum M8 8.8 bolts.

- around every bolt hole must be minimal 1.5x hole diameter material. (see illustration 2-24)

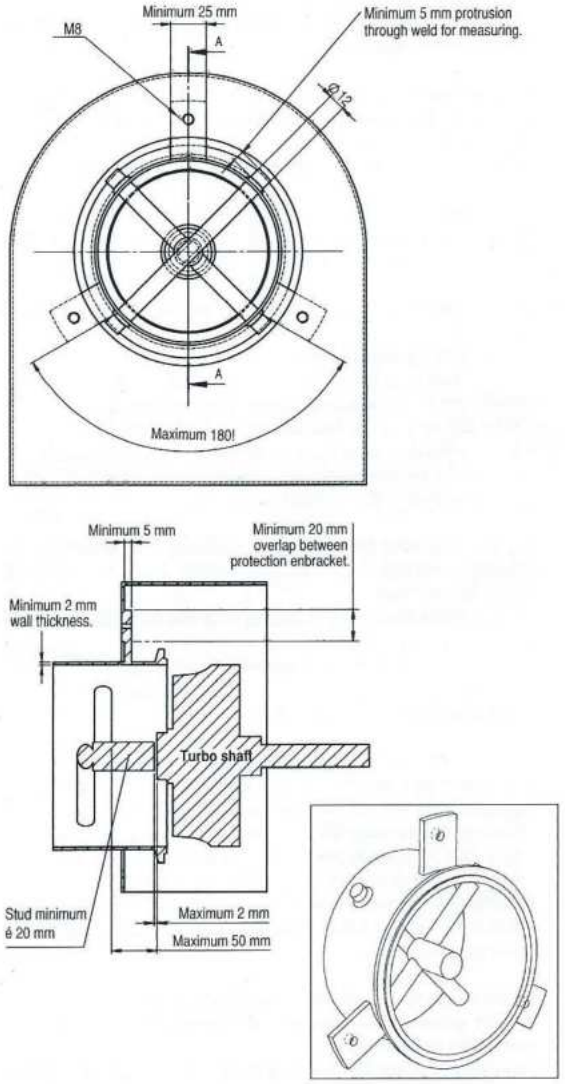

Illustration 2-24: additional connections exhaust pipe

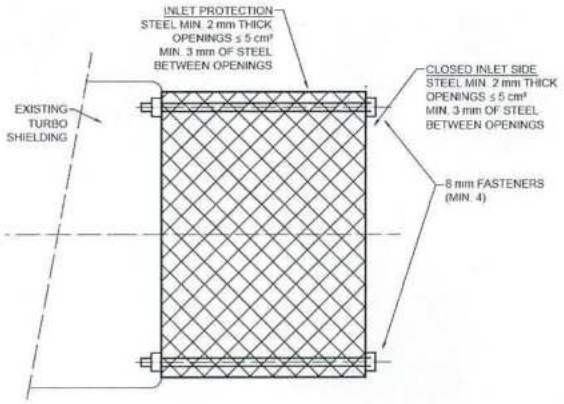

Illustration 2-25: Turbo Inlet Protection

Turbocharger inlet protection for all turbocharged engines used in tractor pulling (exept diesel engines):

All turbo charged engines must have an inlet protection to prevent turbo inletwheel or other parts from coming out.

Protection must consist of:

- steel turbo intake cage minimum 2 mm thick, having openings no larger than 5 cm2.
- around this openings there must be minimum 3 mm steel.
- the air intake cage can be mounted as an extension of the turbo protection, cage must be securely mounted with minimum four (4) 8 mm fasteners.
- in addition, further mounting points can be used on the engine or frame with minimum 8 mm fasteners.
- this intake cage to be seen as a screen fully closed except the inlet side, open inlet side mounted to existing turbo protection. (see illustration 2-25)

FITP inlet protection allowed as turbo inlet protection. (see illustration 2-26 on page 44)

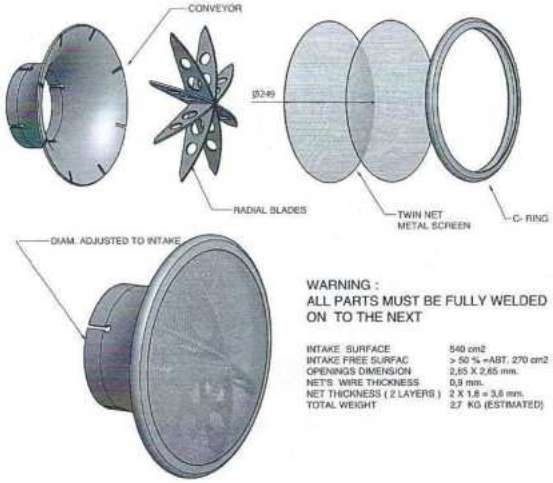

Illustration 2-26: FITP Turbo Inlet Protection

3. All diesel engined vehicles competing at indoor pulls must be equipped with demountable (for clearing purpose) exhaust extension which will discharge all exhaust horizontally rearwards at a point vertically above the hitching device, at a height of 3300 mm from the ground to center of extension pipe. Maximum diameter of extension is 180 mm (minimum 160 mm).
   Tractors: Rear end of extension must protrude rearwards a minimum of 900 mm from rear brace holding extension, the last 400 mm must be horizontal. All diesel smoke pipes used at indoor pulls must be 150 mm higher in the rear than in the front. The exhaust extension must meet the specifications given in illustration 2-27.

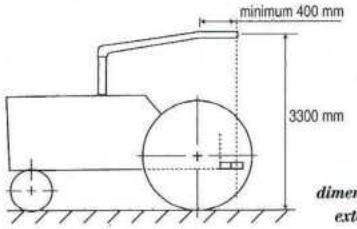

Illustration 2-27: dimensions tractor exhaust extension at indoor pulls

4. All exhaust systems used during indoor pulls must be secured. Excessive leakage or exhaust systems that collapse and do not fall off are cause for disqualification, unless caused by smoke collector on the sled.

L. Fuel and Fuel containers

1. Legal fuels are alcohol, diesel fuel, petrol, aircraft and turbine fuel, methyl-alcohol.
   Oxygen carriers and combustion accelerators are illegal.
   It is allowed to inject water into the engine.
   Diesel fuel is defined by the ETPC as a pure hydrocarbon.
   GTL fuel (Gas To Liquid), CTL fuel (Coal To liquid) and BTL fuel (Biomass To Liquid) are allowed as fuel for diesel engines.
   The use of additives containing oxygen, such as nitro methane, propylene oxide, dioaxane, MTBE, alcohol or nitrous oxide, are strictly prohibited.
   The ETPC will evaluate fuel using a sniffer. This device detects any oxygen carrier when used in fuel. If level of oxygen in blow by gasses is higher than the level of oxygen outside, competitor will be expelled for one (1) year and ten (10) days.
2. ETPC officials or officials from affiliated organizations can check fuel at any time during any event. All pulling vehicles are required to have a sample valve installed for water and fuel sampling, as close to the pump as possible. Multi engine vehicles only one engine.
3. No pressurized fuels are allowed except LPG in manufacturers vessel with a stamp of the date of exposure.
4. Trucks must have a separate fuel tank between the chassis rails that contains a maximum of 50 liters. The original fuel tanks may contain only water.
5. No fuel tanks, fuel pressure gauges, fuel pumps and/or fuel lines allowed in the drivers compartment. If the fuel tank is located behind the driver, a fire barrier is highly recommended from front to rear of compartment beneath the driver's seat between fuel line and driver. Minimum width of fire barrier equal to width of driver's seat.

M. Kill switches

1. All kill switches must be mounted independent of drawbar and/or stabilizer bars.
2. All single pin breakaway kill switches must be able to pivot left or right of center.
3. All pulling vehicles must have an automatic ignition kill switch and/or air shut off, in working order at all times. The kill switch device must also work in a situation where the electric circuit of the vehicle is interrupted. Every kill switch must generally work according to the Fail Safe principle, that is, no situation whatsoever may cause the kill switch go out of function. Track Officials and/or Tech Inspector have the option of checking kill switches as many times as they feel adequate at any event. Switch must be checked with engine running or with Buzz Box only if supplied by puller.

4a. The kill switch on all Modified, Super Stock, Pro Stock and Limited Super Stock tractors must be located in the rear center of the vehicle (maximum of 150 mm off center in any direction) 1200 mm above the point of hook.

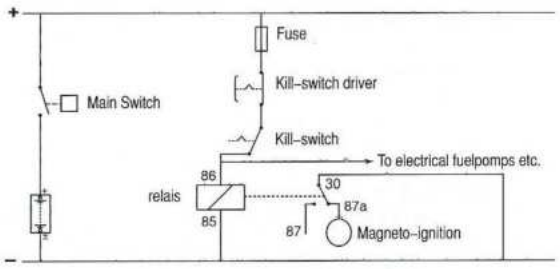

Illustration 2-28: fail safe kill-switch

3b. The kill switch on Two Wheel Drives must be located in the rear center of the vehicle (maximum of 150 mm off center in any direction) 940 mm above the point of hook.

4c. The kill switch on Modifieds <950 kg must be in the rear center (maximum of 150 mm off center in any direction) 450 mm above the point of hook.

5. The kill switch on trucks must be in the rear center (maximum of 150 mm off center in any direction) 530 mm above the point of hook.

6. On spark ignition engine(s) the kill switch must break or ground the ignition circuit. On vehicles equipped with spark ignition engines and electric fuel pump(s), the kill switch must also break the current to the fuel pump(s). On engines with electronic ignition, the ignition system must have a positive (+) connection through the kill switch.
   On engines with magneto ignition, the ETPC highly recommends an auxiliary relay per ignition circuit that shortcuts the ignition to ground when the kill switch is activated. The relay coil must have a direct ground connection and a positive (+) connection through the kill switch. All engines can be connected to one kill switch contact.
   Note: This kill switch interpretation is a recommendation; if it is possible to comply with the rule in another way, this is allowed. Contact the ETPC before applying other solutions.

7. On a diesel, the kill switch must activate the air shut-off required on all diesel engines. A cable may be used for this purpose, but the flaps must have a spring-loaded closing mechanism.
   A system to be deemed acceptable must at least prevent building of boost. A hole with a maximum diameter of 25 mm in the flap is allowed. It is recommended that a gasket/seal arrangement be used to shut off the air flow more effectively. All diesel engines must be equipped with an emergency shutdown air shut-off at the air intake that can be utilized from the driver's seat. On diesels with an electric kill switch system, the solenoids that hold the flaps up must have positive (+) connection through the kill switch. Use of solenoids or electric motors that need voltage in order to activate the flaps is not allowed. Also, systems that need air pressure to activate the kill switch are not permitted.

8. The break-away kill switch must have a solid steel ring (ring no less than 3 mm cross-sectional thickness) attached with a minimum diameter of 50 mm. The cable from the sled will be attached to this ring. Kill switch ring or cable 'ring' must be secured with a nylon tie wrap (1/8 inch). The tie wrap must be broken for a re-pull. ETPC and affiliated organisations will supply the tie wraps for uniformity.

9. If a vehicle has a kill switch or shut off in legal position, and during the pull the kill switch is pulled and the nylon strap is broken and the presiding official inspects and finds the switch capable of operating properly under normal conditions, the vehicle will be allowed to re-pull immediately, or drop six positions. The decision to drop must be made before vehicle leaves the track. It is the pullers responsibility to see that the kill switch is working.

10. The force which is necessary to pull the kill switch must be not more than 10 kg.

11. All ignition engines must have bar type master shut-off switch for all motors in working order within easy reach of driver.
    Diesel and fuel-injected engines with ignition must have a fuel shut off valve control within easy reach of driver (on diesel engines fuel shut off valve on diesel pump is sufficient).
    All diesel engines must be equipped with an emergency shutdown air shut off at the air intake which can be utilized from the driver's seat.

12. On turbine tractors, there has to be a spring on each engine to close the fuel valve.

13. On-board batteries must be securely fastened and properly covered to prevent any sparks. Especially, any possibility of them getting into contact with the kill switch cable from the sled must be avoided.

N. Safety

1. If Track Officials and/or Tech Inspector feels a vehicle is unsafe, they have the right not to allow the vehicle to pull.

2. All pulling vehicles must be equipped with a fire extinguisher or firestick fully charged, in working condition and in easy reach of driver.
   Fire extinguisher must meet following requirements:
   must be according DIN/EN 3 norm; must have CE conformation; must show expiry date, minimal fire fighting time 8 seconds; must be manufacturer approved for use outside under windy conditions; powder extinguisher must be checked yearly (with certificate); all other fire extinguishers must have a pressure gauge to check charged condition and have an age limit of max. five (5) years.
   Fire safety Sticks have no yearly maintenance and have an age limit of five (5) years (expiring date must be on the stick).

3. Government-approved full-face helmets are mandatory. All drivers in all divisions must wear helmets with chin strap fastened when pulling. If you use a helmet with flame retardant lining and a flame retardant neck skirt no head sock is required.

4. The use of a fire suit (including gloves, socks, headsocks, leather shoes) is mandatory for all drivers in all classes. Fire suits must

meet the following requirements:
- A minimum of one layer fire suit of Nomex 3 or equivalent.

Note: For two wheel drives see chapter 7.
- Nomex or equivalent fabric underwear is highly recommended with the use of any fire suit.
- The maximum age of a one layer Nomex 3 (or equivalent) fire suit (Time to 2nd Degree Burn 3 Seconds) is six (6) years, of other suits (i.e. fire retardant cotton) two (2) years.
- The maximum age of a three layer Nomex 3 (or equivalent) fire suit (Time to 2nd Degree Burn 10 Seconds or more) is ten (10) years.

In cases of doubt it is the competitor's responsibility to prove the age and specification of the suit.

If the driver's protective clothing is not in good condition (e.g. rips, tears abrasions and stains that could compromise its ability to protect you) officials have the right not to allow the vehicle to pull.
- All drivers are required to wear a full 360 degree neck collar or HANS (or Hybrid system) device. **Hans (or Hybrid system) is mandatory for mini unlimited class.**
- Suits must have the possibility to tie collar, sleeves and legs. If leather boots are used fire-socks are not mandatory.

5. Officials can ban from competition any vehicle at any event if they believe that the vehicle has a potential safety problem.
6. The ETPC recommends the use of Tech Inspection stickers on all tractors, the best location is on the left front portion of the vehicle.
7. Driver must be seated on the vehicle when his/her engine or engines are being started and running and must have complete control of the vehicle at all times.

   Any time an engine is being started or running, steering wheel must be installed and securely attached to steering-shaft.
8. A reverse gear safety light system is required on all pulling vehicles. A bright white light, must be mounted directly above or below the safety kill switch at the rear of the vehicle. A bright white light in the drivers compartment must be operated by the same system. Both lights are to be activated by the gearshift lever in such way that it will be lit only when the vehicle is in reverse.
9. All pulling vehicles must have a neutral gear. They must be equipped with a starter interrupter switch on the gearshift, which will allow starter engagement only in neutral gearshift position.
10. The use of a safety belt with a fast draw-latch for quick release is highly recommended in all classes without Roll Over Protection (ROP).

    In all classes with Roll Over Protection (ROP, as discribed in Chapter 14 of this rulebook) the use of a 5-point seatbelt-assembly or better is mandatory.

    The seatbelt-assembly must be attached to the ROP. Belt angles according to the guidelines of the manufacturer. Belts should be as short as possible. Crotch belt should never wrap around the front of the seat - the crotch belt should pass through the seat.

    See Illustration 2-29 for general guideline installation of seatbelts.

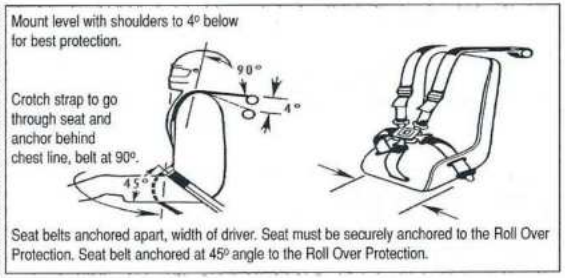

Illustration 2-29: recommended installation seatbelts

11. Helpers on the track must wear protective clothing with long sleeves. The use of light protective clothing is allowed (e.g.: flame retardant cotton, over aged fire suit or welding overall).

O. Seats and fenders

Note: Fenders or tire shields must be constructed so that when the driver is seated and the hands are on the wheel, he cannot touch the rear tire with any part of his body.

1. All vehicles must have a strong, rigid seat and fenders.
   a. All competition vehicles must be equiped with a driver seat that is constructed from a solid material that is formed or welded as one piece.
   b. Seat must be formed on each side to protect the drivers hip area.
   c. Seat back must extend vertical from base of seat to drivers shoulders, seat must fit driver and have a headrest (on seat or on rollcage).
   d. Seats must be securely fastened to vehicle chassis with a minimum of four (4) M8 (grade 8.8 or better) bolts, two (2) across the front of the base and two (2) across rear of base. Additional fixing according to the seat manufacturer's recommendations.
   e. Seats must be constructed from material equivalent in strength to no less than 1,6 mm aluminum.
2. Fender to consist of barrier between driver and tire.
   a. Fender to be a minimum of 25,4 mm. over height of tire.
   b. Fender to curl 100 mm. horizontally from vertical edge over the tyre in the same configuration as the tire, minimum length 460 mm at the top of the fender.
   c. Fender must be able to support the weight of the driver.

P. Stabilizer bars

A. All tractors except modified <950 kg

1. Stabilizer bars are required. The drawbar and drawbar assembly will not in any way be attached to the stabilizer bar assembly.
2. On Modified tractors where the hitch and wheelie bars must be

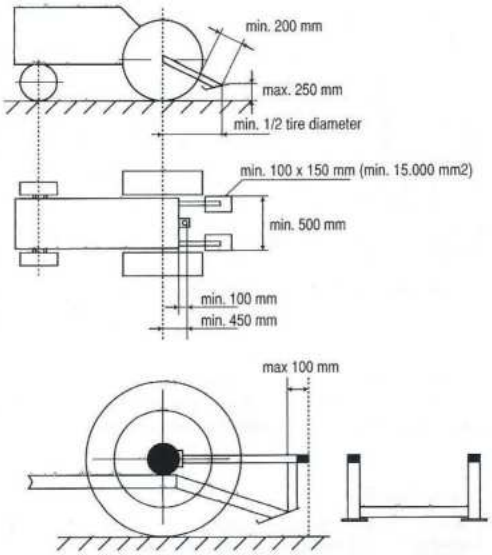

Illustration 2-30: dimensions stabilizer bars, bumper and hitch big tractors

connected to the same frame, the wheelie bars must be fastened at least 100 mm ahead of the hitch (see illustration 2-30).

3. The stabilizer bar will extend a minimum of ½ tire diameter behind a line drawn from the center of the wheel to the ground. The stabilizer pad must not be more than 250 mm off the ground. The stabilizer pad must be a minimum of 15000 mm2 at ground contact point, minimum width 100 mm, minimum length 150 mm. A minimum of 500 mm will be allowed from outside of one pad to the other. Stabilizer bars are not be mounted in any way to the drawbar (see illustration 2-30).

B Modifieds <950 kg

1. Stabilizer bars are required. The drawbar and drawbar assembly will not in any way be attached to stabilizer bar assembly. This device has to have wheels or a skid plate.
   Wheels are to be at least 25 mm wide and 130 mm in diameter.
   Skid pads to be at least 10.000 mm2 at ground contact point (see illustration 2-31).
1. Wheels or skid pads must extend a minimum of 1/2 the tire diameter **+ 50 mm length**, from horizontal line, drawn from rear axle centerline to ground untill rear of pad.
   Pads to be no more than 150 mm above ground. Measured at the highest point of the pad.
   In addition to stabilizer bars there must be a brace that extends vertically 150 mm from rear most tip of the skid pads (see illustration 2-31).

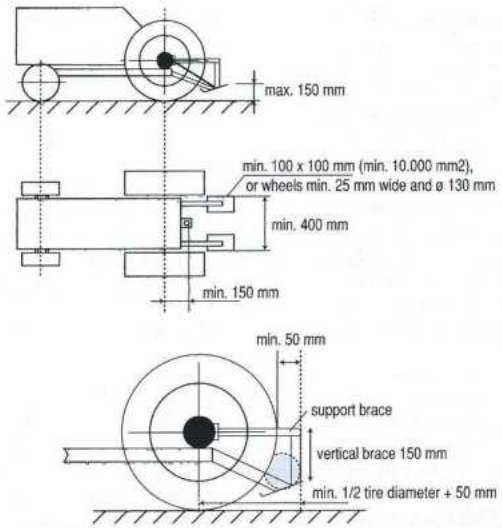

Ill. 2-31: dimensions stabilizer bars, bumper and hitch modifieds <950 kg

There must be a support brace extending inward to frame, axle, or top of stabilizer arms.
One skid pad or wheel is to be on each side of tractor and the minimum distance from outside edge of one pad/wheel to outside edge of the other is 400 mm.

Note: For all classes: The stabilizer bar system must be able to support the weight of the vehicle in the heaviest class pulled. Jacking up the pads so tractor is completely off the ground will be a good test.

The ETPC highly recommends the use of bumpers on all vehicles to prevent them from passing over the buckboard of the sled.

Q. Roll Over Protection (ROP)

A Roll Over Protection (ROP) cage is mandatory in all classes except two wheel drives and trucks. For details see Chapter 14 in this rulebook: Roll Over Protection.

R. Supercharger/turbocharger

1. All turbochargers must be completely shrouded (360 degrees), with steel.
   The shielding must ensure that no wheels or other parts of the turbo can come out in case of a turbo explosion.
   Turbo protection details: see chapter 2 point K 2 Exhaust systems (turbocharger protection)
2. On radial engines all turbochargers/turbocompounders must be

shrouded with 6 mm thick steel covering the turbo wheel. Exhaust pipes must be connected to engine block to prevent rotating. There must be a support to connect turbo compounder shrouding to engine or frame, made of flat steel minimum 40 mm wide and minimum 4 mm thick to prevent shrouding from moving.

3. All intercoolers located outside of normal engine shielding must be shielded with steel 2 mm thick or greater.
4. All supercharger/blower drive components must be shrouded on the top and sides with 2 mm steel or aluminum. The shield to be wider than the drive belt or chain and securely mounted. Blower shield to be wider than all components, idler belt, pulleys, etc.
   Shielding for blower belts can be open at bottom part, not higher than centerline crankshaft.
   Cannister motorsports tube-type blower belt shields are also allowed.
   Billet blower pulleys are mandatory, no cast pulleys allowed.
5. All carbureted or injected aviation, industrial or marine engines using a centrifugal supercharger must be shielded. Shielding will be the same on each side of supercharger. Shield to start centerline of supercharger housing and extend 100 mm rearwards, only allowing notching to fit around inlet motor with a maximum of 210 mm long. Shield to extend 100 mm forward of centerline of blower housing and notching only for accessory components (such as air boxes). On front edge of shielding there will be a rolled lip extending inward 25,4 mm. Shield will be 10 mm thick, made of steel or aluminium with the following specifications: Din AlMgSi 1(EN AW 6082) 360 degrees around supercharger housing with a maximum of 50 mm between shield and supercharger housing.
   The shielding can only be made out of two pieces when the connection is made behind the chassis of the tractor and fit together with four (4) M10 grade 8.8 bolts on both sides. Shield must maintain its integrity (see illustration 2-32).
   No fuel lines between protection and supercharger.

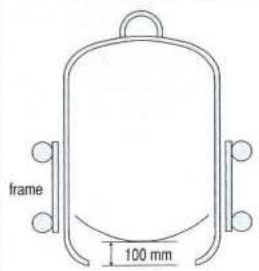

Illustration 2-32
supercharger shielding

6. A supercharger of the type used on Rolls Royce Griffon has to be shielded with min. 10 mm Steel 52.3 (S355J2C / NEN 10025). Shielding will be the same on each side of supercharger. Shield to start centerline of supercharger housing and extend 100 mm rearwards, engine air inlet should also be covered. Shield to extend 100 mm forward of centerline of blower housing allow notching only for accessory components (such as air boxes). On front and back edge of shielding there will be a rolled lip extending inward 25,4 mm. Shield will be one piece 10 mm thick, made of steel 52.3 (S355J2C / NEN 10025) with the same thickness around supercharger housing with a maximum of 50 mm between shield and supercharger housing. Titanium not allowed as protection. Shield on bottom part must be open and shall extend 100 mm further than the bottom part of the supercharger. The shield must on the in- and outside mounted to the frame with a minimum of four (4) M14 grade 8.8 bolts. There must be a minimum of 20 mm material remaining around the drilled holes.
   Modifieds with a single frame in the middle must have one of these 2 options:
   a. a sub frame made out of tubular steel with a minimum of 70x70x4 mm, mounted to the frame to connect the outside of the shielding and must have two (2) straps (new safety belt) with steel connections from topside shielding to top front engine bracket mounting. Shield must maintain its integrity.
   b. frame side of the shielding bolted to the frame, two (2) connecting plates from top front engine bracket mountings bolted to shielding. Two (2) 12 mm steel cables (min. 110kN breaking force) from bottom outside of each shielding to frame. Connection of cables to shielding and cables to frame must be same strength or better as cable strength.

   The front and the back of supercharger housing to be covered with a minimum of 6 mm steel or aluminium with the following min. specifications: DIN AlMgSi 1(EN AW 6082). Holes only allowed for boost control and boost control connection and throttle linkage.
   Front and back shielding to be connected on rolled lip with M8 bolts no more than 75 mm apart on each side. There is 20 mm of space allowed around air intake housing and wheel case.
   Fuel lines inside the shielding are basically not permitted. However those fuel lines that have to be inside the supercharger shielding must be separately protected with steel tubes or shields, minimum thickness is 2 mm.
7. Allison blowers, aftermarket centrifugal superchargers (e.g. Pro chargers) and separate built-on centrifugal superchargers must have a steel shield as described in rule 5 from this chapter, or an ETPC approved shatter blanket.
8. Screw-type blowers and variable multi-speed supercharger devices are not permitted in tractor pulling applications.
9. All engines using a blower on top of the engine must use ETPC approved blower restraints. Restraint system shall consist of four separate straps one (1) on each corner of blower, with each strap securely fastened to the engine by means of its own attachment bracket. The top attachment bracket to sandwich between the lower surface of the injector body and the upper surface of the blower case. The bottom attachment bracket for each strap shall be connected to the engine by a minimum of one (1) M6 bolts or studs (8.8 or better) at the bottom of each strap on all four corners. All blowers must be mounted to the air intake manifold by use of aluminum studs only.
   The maximum age of the blower restraints is at most six (6) years depending on the manufacturers warranty, in case of doubt it is the competitors responsibility to prove the age of the restraints.
10. On all pulling vehicles the tubing on the pressure side of a turbo-

charger or supercharger to the intake must be under the hood or shield or be bolted or strapped securely.
11. The ETPC highly recommends the use of a burst panel on charged engines.
12. Titanium turbo-wheels are not allowed in all classes.

S. Tires

1. Contests open to pulling vehicles with rubber tires. No four wheel drive allowed.
2. No dual tires, tire studs or chains permitted through the wheels.

Modifieds (>950 kg) and Super Stock

1. A limit of 30,5 inch or 800/65 mm is put on the width of tires.
2. Rim diameter limited to 32 inch on tire widths over 24,5 inch (width determined by manufacturers size).
3. The use of Trelleborg tires 700-38 and Taures tires 800-32 is permitted.
4. For tires with measurements 30.5-32 (800/65R32) and 24.5-32 (700/75R32) the maximum circumference is 5.400 mm, if inflated to 0,7 bar (10 psi). Tread width not to exceed 31 inches (788 mm). Some Firestone Puller 2000 tires (first production, not HP marked) are a bit over the 5.400 mm circumference. This type is only permitted if bought by competitor before January 1, 2004. In that case competitor must have written approval from ETPC Tech and Safety Board and/or affiliated national organisation.

Modifieds <950 kg

Maximum tire size is 18.4 x 16.1 with a maximum circumference of 3632 mm and width of lugs to be no wider than 483 mm when inflated to 0,7 bar (10 psi) (on an 18 inch wide rim).

Pro Stock and Limited Super Stock

1. Maximum rim size 38 inches.
2. Maximum tire size with 38 inch rim: 580/70R38 (20.8-38);
   with 34 inch rim: 620175R34 (23.1-34);
   and with 32 inch rim: 650/75R32 (24.5-32).

Maximum of 210 inch (5.334 mm) circumference, when inflated to 0,7 bar (10 psi). Tread width not to exceed 25 inches (635 mm).

Two wheel drives

1. Maximum tread width (ground contact patch) 19 inch = 483mm (18.4x16.1 maximum).

Note: For all other size tyres permission from ETPC Tech and Safety Board and/or affiliated organisation board is required.

Tire/rim Safety Warning: A tire/rim assembly may burst with explosive force causing serious injury or death if
- appr. 35 psi (2.5 kp/cm2) cold inflation pressure is exceeded
- the rim is welded without the tyre first being removed
- the tyre is drilled or screwed onto the rim

T. Weights

1. Weights may not extend rearwards beyond rear tires.
2. All weights must be securely fastened.
3. Any ballast lost while hooked to the sled and under the green flag will be cause for disqualification (internal breakage excepted).
4. The use of movable weights or movable weight carrier is not permitted.

Chapter 3:

SUPER STOCKS

A. Chassis

It shall consist of the following:

1. Engine block must remain in original location as specified by manufacturer.
2. The only engines that are considered legal to be used in Super Stock class are those that are available as farm tractors with front wheel steering.
3. The stock transmission housing or manufacturers replacement and the stock final drive housing or manufacturers replacement.
4. Tractors with cast tube (belly) type frame (e.g. Oliver, Cockshutt, White, Case, Fendt) are allowed to remove the complete frame from front of transmission housing. Engine and clutch housing have to remain in original location and mounted solid as intended by original manufacturer.
5. Planetaries are considered part of final drive and are not removable. Machining OEM components is allowed. Welding of cast iron is not allowed.
   Welding of wheel hub to drive axle only on the outside of wheel.
6. The OEM engine block of given brand has to remain consistent with that brand of transmission and rear housing as well as sheet metal. It cannot be modified externally, except for normal repair or for mounting of fuel injection equipment.
7. Internal webbing and water jacket must remain intact with provisions to rebore engine block.
8. One (1) deckplate with a maximum thickness of 40 mm between bottom of cylinder head and top of engine block is allowed on OEM engines smaller than 8850 cc (540 c.i.). Maximum allowance of 3,3 mm total gasket.
   No deck plates may be utilized on OEM engines larger than 8850 cc (540 c.i.).
   No plates allowed between cylinder head (jug assembly) and crankcase. (i.e. Deutz, Minneapolis-Moline etc.). Replacing cylinders allowed.
9. An external hold down device is allowed to hold the head to the block. This device connects the top of the head to bottom of the block, and must remain behind side shields.
   Note: This device does not replace the safety cables, which must remain in place.
10. Any alterations to the chassis shell must have the written approval

of the ETPC Tech and Safety Board and/or national Tech and Safety Board, before the tractor in question will be considered legal.
Note: The criteria used by the Board will be the retention of stock appearance.

11. All engines must be secured and held rigid to OEM chassis. Engine cannot move independent of rear end/transmission housing.
12. The chassis and frame must remain stock from the rear of the engine block to the rear of the tractor.
13. The grill may be altered to allow air intake, but cannot be totally removed.
14. The clutch housing, transmission case, rear end housing and axle housing must be OEM. Machining OEM components is allowed. Welding of cast iron is not allowed.
    Non component Super Stock tractors are allowed to use a steel clutch protection/housing under the following criteria:
    replacement protection/housing must:
    - be constructed according ETPC rules in chapter 2.10 point B 1-5.
    - have external shape as the OEM housing.
    - have the same lenght as the OEM housing.
    - use OEM mounting-flanges and connecting bolts.
15. No auxiliary internal combustion engines are allowed on board to drive pumps, accessories etc.
16. One piece engine main cap bearings allowed.
17. The use of a spacer between engine block and clutch housing is allowed with a maximum additional thickness of 35 mm. An aluminum spacer plate cannot be part of the clutch protection.
18. The ETPC will allow component tractors in the Super Stock class under the following criteria:
    a. Must install a one piece frame extending from front of tractor to rear axle housing with an ETPC approved bellhousing (see chapter 2 point D) to replace the original clutchhousing. Must also install non cast iron transmission and rear end to replace the original equipment transmission and rear end/final drive housing. No cast iron type transmission or rear end/final drive housing components allowed.
    b. Drawbar and roll cage must be part of the frame structure.
    c. Engine block of given brand to remain consistent with that brand sheet metal.
    d. Engine location of component super stock tractors: centerline of the crankshaft may be below the centerline of rear wheels but must be parallel to the ground +/- 2 degrees. From centerline of rear wheels to center height of front of crankshaft max. drop of 75 mm.
       Frame must be parallel to the ground +/- 2 degrees. This equals approximately 100 mm of drop from the centerline of rear wheels to the 2900 mm wheelbase point. This to be measured with tires, hitch and weight in ready-to-pull position.
    e. All engines in component Super Stock tractors to be mounted no farther forward than 1524 mm (60 inches) measured from the centerline of the rear axle to rear of the engine block.
    f. Crankshaft centerline to be between top and bottom main rail of frame. Bottom of main rail maybe no more than 330 mm. below centerline of crankshaft from rear of engine to front axle.
       Note: after introduction of the skid plates under the front of tractors many use the frame to weld the skid plate tubes on, this is not seen as frame part that must be max. 150 mm below centre line of crankshaft.
    g. All tube ladder-type frames must be covered on the outside with steel or aluminum 2 mm thick and run in the same plane as the crankshaft.
    h. Appearance to remain stock of given brand and model.
    i. Driveline shielding must conform to the same rules as Modified tractors.
    j. All component tractors can run a maximum of 2900 mm wheel base, with a maximum overall length of 4000 mm from center of rear wheel to forward-most point.
    k. The constructions of all component tractors must be pre-approved by national tech inspectors. All dimensions must be measured and, together with pictures, be on a file and signed before the vehicle is allowed to compete. This file has to stay with the tractor and it must be shown upon Tech Inspectors request.

B. Frame/sheetmetal

1. Tractor must have hood and grill in place as intended by the manufacturer.
2. Sheet metal (hood appearance) and engine must match as it comes from OEM production.
   Sheetmetal can be up/down-graded to present/past manufacturer by approval of ETPC T&S board and national T&S board.
3. Sheet metal has to be stock length and in stock location.
4. Tractor must retain stock appearance.
5. The distance from the center of the rear axle to that part of the hood that is farthest forward must be the same length as that model of the upgraded sheet metal.
6. Wheelbase rule will apply according to the original chassis, not to the model of the upgraded sheet metal.
7. Maximum wheelbase is 2900 mm unless originally produced with longer wheelbase, in which case stock length must remain. Maximum length is 4000 mm from center of rear wheel to forward most point including weights and weight racks.
8. Super Stock chassis rules A: 1-10 will apply according to the original chassis, not to the model of the upgraded sheet metal.

C. Frame options

1. Tractor must have either:
   a. safety tie bars made out of steel mounted to rear axle housing with at least four (4) axle housing bolts and extending forward of flywheel area and fastened to side of engine block or main frame with at least three (3) 14 mm steel bolts grade 8.8 (see illustration 3-1).

or b. a one piece frame extending from front of tractor to rear axle housing mounting bolts.

or c. a divisible frame under the following conditions:
   - The steel split-frame construction must extend from front of

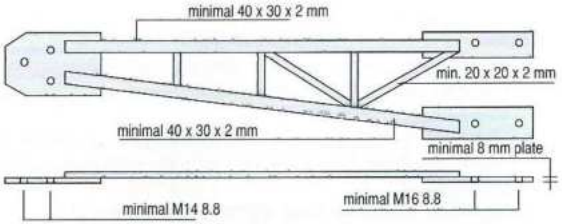

Illustration 3-1: safety frame construction Super Stock

tractor to rear axle housing mounting bolts.

- The two pieces have to fit in one another (sliding in construction) in the area where the tractor can be split (clutch area).
- The two pieces of the frame must be made of tubes or u-shaped steel with a thickness of at least 3 mm.
- If the frame is made of u-shaped steel it must have a u-shaped connection bar inside min. 500 mm length (250 mm in the rear part and 250 mm in the front part of the u-shaped split frame).
- If the frame is made out of tubes it must have inner tubes min. 500 mm length. (250 mm in the rear part and 250 mm in the front part of the tube-frame).
- Rear part of the frame has to be mounted to rear-axle housing with at least four (4) axle housing bolts and extending forward of flywheel area and fastened to side of engine block or engine plate with at least three (3) 14 mm bolts min. grade 8.8.
- Two parts of frame must be locked together with at least two (2) fasteners of 8 mm steel.
- Two piece frame must be of sufficient strength to support the weight of tractor with the bolts used to split the tractor removed.

2. Tie bars or frame must be of sufficient strength to support the weight of tractor with the bolts used to split the tractor removed.

D. Engines

1. In the Super Stock class the engine size is limited to 10.650 cc (650 c.i.).
2. Engine block must be available as OEM-part from parts counter.
3. All turbo charged engines must have a cable totally surrounding the engine block and head. See chapter 2, par. I-13 for details.
4. Super Stocks are limited to three (3) pressure stages with a maximum of four (4) turbo chargers.
5. Super Stock tractors are limited to two (2) valves per cylinder, except if particular tractor model is equipped with a four valve engine. In that case it is allowed to use the OEM head.
6. Conversion from 4-stroke into 2-stroke principle is allowed on diesels only.

E. Clutches

1. Only mechanically activated clutches are permitted. Hydraulic engagement is allowed.
2. Clutches and clutch protections as per chapter 2 point D.

3. Component Super Stock tractors must use an ETPC approved bell-housing or steel protection (chapter 2, par. D point 10 a or b).

F. Shatterblankets

1. Shatterblankets must be on the inside of the tiebar or one piece frame and the tiebar must be fastened forward of the rear of the engine block. However, in some occasions there is no space for the blanket inside the tiebar or the onepiece frame, in that case a written approval from ETPC and/or affiliated organisation must be available to Tech Inspectors.

G. Firewall/deflection shield

1. There must be a min. 2mm steel deflection shield between driver and engine from top of hood to top of torque tubes or transmission or clutch housing from side shield to side shield. All turbocharged alcohol tractors must have this protection made out of stainless steel with a minimum of 2 mm thicknes. The shield(s) also serve(s) as a flash fire shield.

H. Starting chemicals

1. All ether bottles (or starting aids) must be placed outside of engine compartment.

I. Onboard fire control systems

1. Super Stock tractors that require tools for removal of side shields must be equipped with an onboard firecontrol system. Onboard system nozzles must be in engine compartment.
2. Super Stock tractors utilizing onboard fire extinguishing system must place one nozzle on each side of engine, inside the engine compartment. Nozzles cannot be attached to the sheet metal.

J. Legality

1. If the ETPC or national organisation doubts the legality of any entry, or upon protest by another contestant in that class, contestant in question must verify that 150 units of the tractor in question have been manufactured (notarized statement from the manufacturer), furnish parts numbers, and prove to the Boards satisfaction that the tractor is legal.

Chapter 4:

PRO STOCKS

A. Chassis

It shall consist of the following:

1. The stock engine block or OEM engine block that will operate with the stock crankshaft for that model without any alterations for chassis mounting.
2. Engine block must remain in original location as specified by manufacturer.
3. All engines must be secured and held rigid to OEM chassis. Engine cannot move independent of rear end/transmission housing.
4. The stock transmission housing or manufacturers replacement and the stock final drive housing or manufacturers replacement. Planetaries are considered part of final drive and are not removable. Machining OEM components is allowed. Welding of cast iron is not allowed.
   Welding of wheel-hub to drive-axle only on the outside of wheel.
5. The OEM engine block cannot be modified externally, except for normal repair or for mounting of fuel injection equipment.
6. Internal webbing and water jacket must remain intact with provisions to rebore engine block.
7. A deck plate between the bottom of the cylinder head and the top of the engine block is allowed. The maximum distance between the centerline of the crankshaft and the top of engine block including deckplate and gasket-material is 410 mm.
8. Any alterations to the chassis shell must have the written approval of the ETPC Tech and Safety Board and the national Tech and Safety Board, before the tractor in question will be considered legal.
9. The chassis and frame must remain stock from the rear of the engine block to the rear of the tractor.
10. The only vehicles that are considered legal in Pro Stock class are those that are available as farm tractors with front wheel steering.
11. The clutch housing, transmission case, rear end housing and axle housing must be OEM. Machining OEM components is allowed. Welding of cast iron is not allowed.
    Non component Pro Stock allowed to use a steel clutch protection/housing under the following criteria:
    replacement steel clutch protection/housing must:
    - be constructed according ETPC rules in chapter 2.10 point B 1-5.
    - have external shape as the OEM housing.
    - have the same length as the OEM housing.
    - use OEM flange and connecting bolts.
12. One piece engine main cap bearings allowed. One piece main cap not considered a girdle.
13. The use of a spacer between engine block and clutch housing is allowed with a maximum additional thickness of 35 mm. An aluminum spacer-plate cannot be part of the clutch protection.
14. The ETPC will allow component tractors in the pro stock class under the following criteria:
    a. Must install a one-piece frame extending from front of tractor to rear axle-housing with an ETPC approved bellhousing (chapter 2 point D) to replace the original clutchhousing. Must also install non cast-iron transmission and rear end to replace the original equipment transmission and rear end/final drive housing. No cast iron type transmission or rear end/final drive housing components allowed.
    b. Drawbar and roll cage must be part of the frame structure.
    c. Engine block of given brand must remain consistent with that brand sheet metal.
    d. Engine location of component Pro Stock tractors: centerline of the crankshaft may be below the centerline of rear wheels but must be parallel to the ground +/- 2 degrees. From centerline of rear wheels to center height of front of crankshaft max. drop of 75 mm.
       Frame must be parallel to the ground+/- 2 degrees. This equals approximately 100 mm of fall from centerline of rear wheels to the 2900 mm wheelbase point. This to be measured with tyres, hitch and weight in ready-to-pull position.
    e. All engines in component pro stock tractors to be mounted no farther forward than 1524 mm (60 inches) measured from the centerline of the rear axle to rear of the engine block.
    f. Crankshaft centerline has to be between top and bottom main rail of frame. Bottom of main rail maybe no more than 300 mm. below centerline of crankshaft from rear of engine to front axle.
       Note: after introduction of the skid plates under the front of tractors many use the frame to weld the skid plate tubes on, this is not seen as frame part that must be max. 150 mm below centre line of crankshaft.
    g. All tube ladder type frames must be covered on the outside with steel or aluminum 2 mm thick and run in the same plane as the crankshaft.
    h. Appearance to remain stock of given brand and model.
    i. Driveline shielding must conform to the same rules as Modified tractors.
    j. All component tractors can run a maximum of 2900 mm wheel base, with a maximum overall length of 4000 mm from center of rear wheel to forward-most point.
    k. The constructions of all component tractors must be pre-approved by national tech inspectors. All dimensions must be measured and, together with pictures, be on a file and signed before the vehicle is allowed to compete. This file has to stay with the tractor and it must be shown upon Tech Inspectors request.

B. Frame/sheet metal

1. Tractor must have hood and grill in place as intended by the manufacturer.
2. Sheetmetal (hood appearance) and engine must match as it comes from OEM production.
   Sheetmetal can be up/down-graded to present/past manufacturer by approval of ETPC T&S board and national T&S board
3. Sheet metal to be stock length and in stock location.
4. Tractor must retain stock appearance.

5. The distance from the center of the rear axle to that part of the hood that is farthest forward must be the same length as that model of the upgraded sheetmetal.
6. Wheelbase rule will apply according to the original chassis, not to the model of the upgraded sheetmetal.
7. Maximum wheelbase is 2900 mm unless originally produced with longer wheelbase, in which case stock length must remain.
   Maximum length is 4000 mm from center of rear wheel to forward-most portion including weights and weight racks.
8. Pro Stock chassis rules A: 1-8 will apply according to the original chassis, not to the model of the upgraded sheet metal.

C. Frame options

1. Tractor must have either:
   a. safety tie bars made out of steel mounted to rear axle housing with at least four (4) axle housing bolts and extending forward of flywheel area and fastened to side of engine block or main frame with at least three (3) 14 mm steel bolts grade 8.8. (See illustration 4-1)

or b. a one piece frame extending from front of tractor to rear axle housing mounting bolts.

or c. a divisible frame under the following conditions:
   - The steel split-frame construction must extend from front of tractor to rear axle housing mounting bolts.
   - The two pieces have to fit in one another (sliding in construction) in the area where the tractor can be split (clutch area).
   - The two pieces of the frame must be made of tubes or u-shaped steel with a thickness of at least 3 mm.
   - If the frame is made of u-shaped steel it must have a u-shaped connection bar inside min. 500 mm length (250 mm in the rear part and 250 mm in the front part of the u-shaped split frame).
   - If the frame is made out of tubes it must have inner tubes min. 500 mm length. 250 mm in the rear part and 250 mm in the front part of the tube-frame).
   - Rear part of the frame has to be mounted to rear-axle housing with at least four (4) axle-housing bolts and extending forward of flywheel area minimal M16 8.8 minimal M14 8.8 and fastened to side of engine block or motor-plate with at least three (3) 14 mm bolts min. grade 8.8.

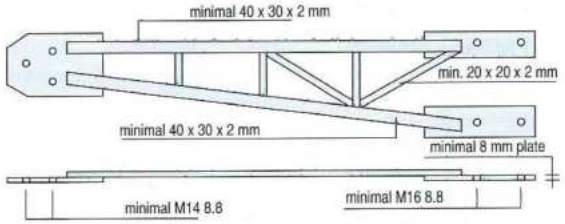

Illustration 4-1: safety-frame construction pro stock

   - Two parts of frame must be locked together with at least two (2) fasteners of 8 mm steel.
   - Two piece frame must be of sufficient strength to support the weight of tractor with the bolts used to split the tractor removed.
2. Tie bars or frame must be of sufficient strength to support the weight of tractor with the bolts used to split the tractor removed.

D. Engines

1. Pro stock class limited to 8364 cc (510 ci.).
   Downsizing allowed, maximum 2.0 percent.
2. All turbo charged diesel engines must have a cable totally surrounding the engine block and head. See chapter 2, par. I, point 13 for details.
3. Pro stocks are limited to one (1) pressure stage and allowed to have one air compressing device.
   Maximum diameter inlet wheel 129,5 mm (5.1 inch), maximum diameter exhaust wheel 133,4 mm (5.25 inch). Limit is locked till 01.01.2026 to enable a clear path for all competitors in the Pro Stock class.
4. Engine cylinder head(s) must be OEM agricultural type for that brand engine and matching the original engine block - no mixing of brands.
   - Two (2) valves per cylinder, multivalve heads are only allowed if available as OEM for the brand.
   - No conversion to overhead cam allowed.
   - Connection side of inlet and exhaust manifolds must be 90 degrees with head gasket or OEM.
   - All ports must be in stock location and the valves have to come in at the stock angle. The stock angle is 90 degrees.
   - All bolt patterns must stay in stock location.
   - Aftermarket machining and modifications allowed on the cylinder head(s) casting. No alterations to the casting allowed that will change the original air inlet and outlet positions or bolt pattern.
   - Steel recast or billet heads allowed (no aluminum) but must be with OEM dimensions. Water channels are not required in recast/billet heads.
   - OEM and recast/billet cylinder heads must be inspected 'off the tractor' and will get a unique stamp and serial number once approved. Recast/billet cylinder heads must be presented for inspection along with an OEM cylinder head for the brand as a reference to check all the points above.
   - Tractors competing in ETPC competitions (i.e. Eurocup Series/European Championships) must have the unique stamp and serial number. Tractors competing without this must contact National and ETPC Tech & Safety Board to make an appointment when and where the inspection will be done.
   - NTTO Cylinder head made according to NTTO specified dimensions may be used at Eurocup Series/European Championships. Limit is locked till 01.01.2026 to enable a clear path for all competitors in the Pro Stock class.
5. Pro stocks may have one (1) fuel injection pump of any size, only

one (1) pump element per cylinder allowed (Common Rail diesel engines are allowed to have more than one (1) fuel pump).
If using OEM (available of parts-counter) 12 cylinder fuel injection-pump two (2) pump-elements per cylinder allowed.
The use of a Common Rail diesel fuel system is permitted under the following criteria and specifications:
- must use a dual throttle position sensor output circuit (circuit 1 ramps up, circuit 2 ramps down)
- single throttle-circuit not allowed
- must use two (2) springs to return throttle to idle.
- kill switch must interrupt the permanent current ('30') and the current by ignition ('15') to the engine control unit (ECU)
- kill switch must work according the fail-safe principle, activated when the electrical system is interrupted
- kill switch must also activate the air shut-off as required on all diesel engines. (see chapter 2M, kill switches, point 7)
- must have a fuel shut off valve control in the low pressure line towards the high-pressure pump and as close as possible to the high-pressure pump with control in easy reach of driver.

6. Diesel fuel only. Water injection and/or intercooler allowed. Use of gasohol and/or alcohol is prohibited.
7. No overhead cams allowed.
8. Conversion from 4-stroke into 2-stroke principle is not allowed.

E. Clutches

1. Only mechanically activated clutches are permitted. Hydraulic engagement is allowed.
2. Clutches and clutch protections: see chapter 2, par. D of this rulebook.

F. Shatterblankets

1. Shatterblankets must be on the inside of the tiebar or one piece frame and the tiebar must be fastened forward of the rear of the engine block. However, in some occasions there is no space for the blanket inside the tiebar or the onepiece frame, in that case a written approval from ETPC or affiliated organisation must be available to Tech Inspectors.

G. Firewall/deflection shield

1. Steel deflection shield between driver and engine from top of hood to top of torque tubes or transmission or clutch housing from side shield to side shield, minimum 2 mm thick. This also serves as a flash fire shield.

H. Starting chemicals

1. All ether bottles (or starting aids) must be placed outside of engine compartment.

I. Onboard fire control systems

1. Pro Stock tractors that require tools for removal of side shields must be equipped with an onboard firecontrol system. Onboard system nozzles must be in engine compartment.

2. Pro Stock tractors utilizing onboard fire control extinguishing system must place one nozzle on each side of engine, inside the engine compartment. Not to be attached to the sheet metal.

J. Legality

1. If the ETPC or national organisation doubts the legality of any entry, or upon protest by another contestant in that class, contestant in question must verify that 150 units of the tractor in question have been manufactured (notarized statement from the manufacturer), furnish parts numbers, and prove to the Boards satisfaction that the tractor is legal.

Chapter 5:

MODIFIEDS (>950 kg)

1. Modified tractors are those using any combination of engine(s), transmission(s) and final drive.
2. No portion of a Modified tractor, incl. ballast weight, may exceed 4260 mm forward of the center of the rear wheel. Tow hitch not included.
3. For engine limitations see Chapter 12 of this rulebook.

Chapter 6:

MODIFIEDS 950 kg

1. Modified 950 kg are defined as modified tractors with a maximum weight of 950 kg including driver, oil, water and fuel, ready to compete.
2. Modified 950 kg tractors are to meet:
   a. Modified (>950 kg) shielding and safety criteria.
   b. All Mini Modifieds with a transmission must shield the transmission with a safety blanket
      - Blanket must cover the full width of the transmission and 360 degrees around with at least 150 mm overlap.
      - Blanket must be as close as possible around the transmission.
      - Blanket must be connected to the frame or bellhousing/engine in such a way that the blanket cannot move to the back or to the front.
      - Minimum requirements of the blanket: 10 layers of Kevlar/Aramide or 15 layers of ballistic nylon.
      - Secured with min. two (2) straps around the transmission.
      - Top of the blanket secured with two (2) straps to bellhousing bolts and at the bottom two (2) straps to the tractor frame on each side.
      - Teams were a blanket is not possible (i.e. planetairy gear transmission behind a bellhousing) must ask permission (with

pictures and drawings) of the National- and ETPC Tech & Safety board before allowed driving without a blanket.

b. All Mini Modifieds must have skid-plates under the front part of the chassis/ frame to keep vehicle on the track in case of losing a front wheel.

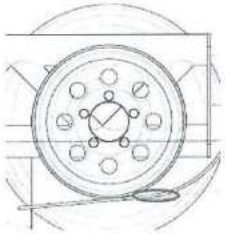

Skid plate width: from frame rail to frame rail, length: min. 100 mm + rolled edge front (min. 100 mm curve). Skid plate material thickness min. 4 mm. Maximum ground clearance 50 mm.
It is recommended to make the flat sliding part of the plate under a small angle so it will slide better if it hits the ground.

3. No portion of any tractor, incl. ballastweight, may exceed 2440 mm forward of the center of the rear wheel. Tow hitch not included.
4. No portion of any tractor shall exceed 1930 mm in width.
5. It is allowed to have one or more engines.
6. For engine-limitations see Chapter 12 of this rulebook.

Chapter 7:

TWO WHEEL DRIVES

A. General rules

1. Maximum length of vehicle to be 4570 mm from center of rear axle to forward most portion of vehicle, including weight racks, etc. Tow hitch not included.
2. Maximum width of vehicle is 2440 mm wide at widest point.
3. Weights are not to exceed forward as set in rule 1 above nor rearwards more than 305 mm from hitching point or past rear of vehicle, whichever is greater but not to interfere with hitching and unhitching of vehicle. The area 150 mm wide and 305 mm high immediately above the drawbar must be free of all obstructions (including weights, wheelie bars and second drawbars) for ease of hooking and unhooking.
4. Any factory production body truck or van is allowed. Vehicle body style must be or have been available from a dealer as mass produced. Passenger type bodies are allowed.
5. Side doors must be mounted and closed if truck was manufactured with doors. All doors must have a single latch design, allowing the door to be opened from both inside and outside.
6. All competing drivers at all ETPC or affiliated organisation events are required to wear a minimum of one layer fire suit of Nomex 3 or equivalent. However, drivers of flip top body type vehicles not equipped with working doors that are recognizable and operate from inside and outside of the vehicle and do not have a complete fire wall will be required to wear three layers of fire protection (three layer suit or two layer suit with Nomex or equivalent fabric underwear). Escape hatches will not be counted as a working door.
7. Front and back glass or plexiglas required. Factory tinted glass acceptable. Stained or smoked glass not allowed on any windows. Tinted or reflecting windows that impair Track Officials view of drivers compartment are unacceptable.
8. A funny car body is a body that has to be lifted up entirely to provide access to the drivers compartment. This kind of bodies must have an escape hatch or doors on the top or in the back of the body. If a funny car body is used, the driver has to be able to prove that he can leave his vehicle within 10 seconds, without using the lifting system of the body.
9. All vehicles must have a complete firewall (no holes except for controls). Firewall has to be made of aluminum or steel (min. 2 mm), or Lexan (min. 3 mm).
   If driver compartment is not completely sealed from engine compartment, driver must wear an approved complete fire suit including mask, helmet and gloves and have on-board fire extinguisher with minimum of four nozzles.
10. Truck must have hood, grill and fenders in place as intended by manufacturer. Contact ETPC or affiliated organisation board for any deviations.
11. Truck must have a presentable van/pickup bed with cover or flatbed in place.
12. Fuel tanks, fuel pressure gauges and fuel lines inside operator compartment not allowed.
13. Chassis (frame) may be truck frame of fabricated frame like modified tractors.
14. The driver must be in the original drivers compartment.
15. No part of the body that is mounted with hinges may leave its original place during a pull. Escape hatches in the top of the body are excluded from this rule. If a part of the body does leave its original place, the vehicle will be disqualified.

B. Engines and drivelines

1. One automotive type engine or its replica allowed. An automotive engine is any engine or its replica available in a passenger car (maximum of eight (8) cylinders). Chevrolet talldeck engines - if within the limit - are allowed. A replica must accept and swing a stock crankshaft to be considered legal.
   All engines must be behind grill and in engine compartment unless the ETPC or affiliated organisation board approves a deviation.
2. All pertinent criteria of modified tractors regarding safety, construction and operation will be adhered to unless special variations are noted.
3. All shielding on superchargers, turbochargers, centrifugal superchargers, intercoolers, etc. are to be the same as Modified and Super Stock tractors.
   Shielding for blower belts on V8 engines can be open at bottom part.
4. Engine to clutch to transmission and shielding has to be constructed the same as stated for a Modified tractor.
5. An axle and hub bolts shield (steel or aluminum min. 2 mm thick)

is required on all rear ends unless it is a planetary drive rear end.
6. If the battery is inside the drivers compartment it must be safely enclosed and securely fastened down.
7. No radiator, heat exchanger and/or water hoses are allowed inside the drivers compartment.
8. All two wheel drive vehicles must have vertical bumpers min. 610 mm from the ground to prevent the vehicle from passing over the buckboard of the sled.
   Bumper has to extend a minimum of 200 mm horizontally and must be of rigid construction.
9. The hook point of the hitch has to be higher than the mounting point of the drawbarconstruction.
10. For engine-limitations see Chapter 12 of this rulebook.

Chapter 8:

LIMITED SUPER STOCKS

A. Chassis

It shall consist of the following:

1. The stock engine block or OEM engine block that will operate with the stock crankshaft for that model without any alterations for chassis mounting.
2. Engine block must remain in original location as specified by manufacturer.
3. All engines must me secured and held rigid to OEM chassis. Engine cannot move independent of rear end/transmission housing.
4. The stock transmission housing or manufacturer's replacement and the stock final drive housing or manufacturer's replacement. Planetaries are considered part of final drive and are not removable. Machining OEM components is allowed. Welding of cast iron is not allowed.
   Welding of wheel-hub to drive-axle only on the outside of the wheel.
5. The OEM engine block cannot be modified externally, except for normal repair or for mounting of fuel injection equipment.
6. Internal webbing and water jacket must remain intact with provisions to re-bore engine block.
7. A deck plate between the bottom of the cylinder head and the top of the engine block is allowed. The maximum distance between the centreline of the crankshaft and the top of the engine block including deck plate and gasket-material is 410 mm. Deck plate must have same bore diameter as engine, from bottom to top of plate.
8. Any alterations to the chassis shell must have the written approval of the ETPC Tech and Safety Board and the national Tech and Safety Board, before the tractor in question will be considered legal.
9. The chassis and frame must remain stock from the rear of the engine block to the rear of the tractor.

10. The only vehicles that are considered legal in the Limited Super Stock class are those that are available as farm tractors with front wheel steering.
11. The clutch housing, transmission case, rear end housing and axle housing must be OEM. Machining OEM components is allowed. Welding of cast iron is not allowed.
    Non-component Limited Super Stocks allowed to use a steel clutch protection/housing under the following criteria:
    replacement steel clutch protection/housing must:
    - be constructed according ETPC rules in chapter 2.10 point B 1-5.
    - have external shape as the OEM housing.
    - have the same length as the OEM housing.
    - use OEM flange and connecting bolts.
12. One piece engine main cap bearings allowed. One piece main cap not considered a girdle.
13. The use of a spacer between engine block and clutch housing is allowed with a maximum additional thickness of 35 mm. An aluminum spacer-plate cannot be part of the clutch protection.
14. The ETPC will allow component tractors in the Limited Super Stock class under the following criteria:
    a. Must install a one-piece frame extending from front of tractor to rear axle-housing with an ETPC approved bellhousing (chapter 2 point D) to replace the original clutch housing. Must also install non-cast-iron transmission and rear end to replace the original equipment transmission and rear-end/final drive housing. No cast iron type transmission or rear-end/final drive housing components allowed.
    b. Drawbar and roll cage must be part of the frame structure.
    c. Engine block of given brand must remain consistent with that brand sheet metal.
    d. Engine location of component Limited Super Stocks: centreline of the crankshaft may be below the centreline of rear wheels but must be parallel to the ground +/- 2 degrees. From centreline of rear wheels to centre height of front of crankshaft max. drop of 75 mm. Frame must be parallel to the ground +/- 2 degrees. This equals approximately 100 mm of fall from centreline of rear wheels to the 2900 mm wheelbase point. This to be measured with tyres, hitch and weight in ready-to-pull position.
    e. All engines in component Limited Super Stock tractors to be mounted no further forward than 1524 mm (60 inches) measured from the centreline of the rear axle to rear of the engine block.
    f. Crankshaft centreline has to be between top and bottom main rail of the frame. Bottom of main rail maybe no more than 330 mm below centreline of crankshaft from rear of engine to front axle.
       Note: after introduction of the skid plates under the front of tractors many use the frame to weld the skid plate tubes on, this is not seen as frame part that must be max 330 mm below centre line of crankshaft.
    g. All tube ladder type frames must be covered on the outside with steel or aluminium 2 mm thick and run in the same plane as the

crankshaft.

h. Appearance to remain stock of given brand and model.

i. Driveline shielding must conform to the same rules as Modified tractors.

j. All component tractors can run a maximum of 2900 mm wheel base, with a maximum overall length of 4000 mm form centre of rear wheel to forward-most point.

k. The constructions of component tractors must be pre-approved by national tech inspectors. All dimensions must be measured and, together with pictures, be on a file and signed before the vehicle is allowed to compete. This file has to stay with the tractor and it must be shown upon Tech Inspectors request.

B. Frame/sheet metal

1. Tractor must have hood and grill in place as intended by the manufacturer.
2. Sheet metal can be up or downgraded to present or past manufacturer by approval of ETPC Tech and Safety Board and national Tech and Safety Board.
3. Sheet metal to be stock length and in stock location.
4. Tractor must retain stock appearance.
5. The distance from the centre of the rear axle to that part of the hood that is farthest forward must be the same length as that model of the upgraded sheet metal.
6. Wheelbase rule will apply according to the original chassis, not to the model of the upgraded sheet metal.
7. Maximum wheelbase is 2900 mm unless originally produced with longer wheelbase, in which case the stock length must remain. Maximum length is 4000 mm from centre of rear wheel to forward most portion including weights and weight racks.
8. Limited Super Stocks chassis rule A: 1-8 will apply according to the original chassis, not to the model of the upgraded sheet metal.

C. Frame options

1. Tractor must have either:
   a. Safety tie bars made out of steel mounted to rear axle housing with at least four (4) axle housing bolts and extending forward of flywheel area and fastened to side of engine block or main frame with at least three (3) 14 mm steel bolts grade 8.8. (See illustration 8.1)

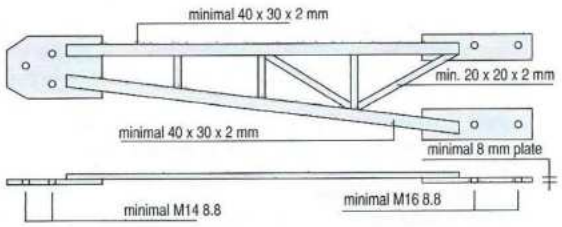

Illustration 8-1: safety-frame construction limited super stock

or b. A one piece frame extending from front of tractor to rear axle housing mounting bolts.

or c. A divisible frame under the following conditions:
- The steel split-frame construction must extend from front of tractor to rear axle housing mounting bolts.
- The two pieces have to fit in one another (sliding in construction) in the area where the tractor can be split (clutch area).
- The two pieces of the frame must be made of tubes or u-shaped steel with a thickness of at least 3 mm.
- If the frame is made of u-shaped steel it must have a u-shaped connection bar inside min. 500 mm length (250 mm in the rear part and 250 mm in the front part of the u-shaped split frame).
- If the frame is made out of tubes it must have inner tubes min. 500 mm length. 250 mm in the rear part and 250 mm in the front part of the tube-frame).
- Rear part of the frame has to be mounted to rear-axle housing with at least four (4) axle-housing bolts and extending forward of flywheel area minimal M16 8.8 minimal M14 8.8 and fastened to side of engine block or motor-plate with at least three (3) M14 mm bolts min. Grade 8.8.
- Two parts of frame must be locked together with at least two (2) fasteners of 8 mm steel.
- Two piece frame must be of sufficient strength to support the weight of tractor with the bolts used to split the tractor removed.

2. Tie bars or frame must be of sufficient strength to support the weight of tractor with the bolts used to split the tractor removed.

D. Engines

1. Limited Super Stock class limited to:
   - Engines that use methanol as fuel:(no other fuels allowed)
   - Maximum ≤ 7636 cc (466 cubic inch),
   - Limited Super Stock Tractors build according pre 2023 rules ≤ 8357 cc (510 cubic inch) are allowed but must have an Air restrictor of ø 102 mm. This is only applicable for 1: M. Ritter (CH), 2: Backfire (D).

   For 2023 season:
   - old rule ≤ 8357 cc (510 cubic inch) engines must have a restrictor of ø 102mm;
   - ≤ 7636 cc (466 cubic inch) engines with turbo's >4.25 inch must have a restrictor of 108 mm metal, according drawing 9.2 on the next page.

   Air restrictors must be accessible for checking with ETPC size gauge/template.
2. All turbo charged inline engines must have a cable totally surrounding the engine block and head. See chapter 2, par. I-13 in this rulebook for details.
3. Limited Super Stocks are limited to 1 (one) pressure stage with a maximum of 1 (one) turbo charger.
   The maximum diameter of the inlet side of the turbo housing is 110 mm (4.25 inch turbo). For a bigger turbo (max 4.8 inch: an Air Restrictor: internal diameter max. 108 mm and length max. 100 mm (see drawing 8.2 on the next page).

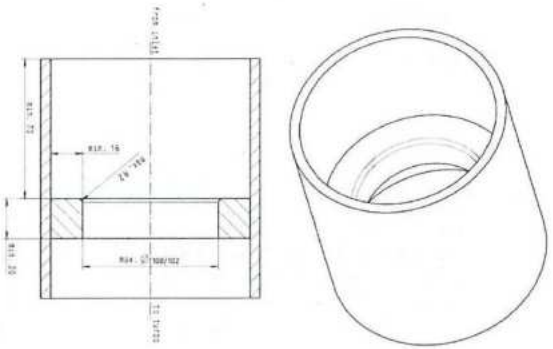

Illustration 8-2: air restrictor limited super stock

Maximum length from the compressor wheel blade to the restrictor 50 mm, min. Length 20 mm).

4. Engine cylinder head(s) must be OEM agricultural type for that brand engine and matching the original engine block, no mixing of brand. Within a brand it is allowed to make a combination of cylinder head and engine block (e.g. 40-serie JD engine with 50-serie head). There must be a minimum of 150 units produced of this engine block and cylinder head(s). Replacement cylinder head(s) used must be available under the part number from the manufacturer of that engine brand as listed in the original parts catalogue for that particular engine. If the brand no longer manufactures that cylinder head(s) and an alternative supplier now produces them these are acceptable as long as they are approved as a 'true' replacement copy by the original brand manufacturer and conform to all other rules.
   For all engines designed as 'water cooled' within the cylinder head system the original water channels must be present as per the original production cylinder head(s) casting used in serial production. The original cylinder head(s) must be able to fit and work with the standard agricultural tractor engine as intended in normal daily use within agriculture - operationally not just functionally (i.e. must continue to work continuously over a number of hours). 'Air cooled' cylinder head(s) must be as per original serial production casting.
   No recasting of cylinder head(s). Recasting will be defined as the process of manufacturing with an alternative mould/template to the one used in serial production.
   Aftermarket machining and modifications allowed on the cylinder head(s) casting. No alterations to the casting allowed that will alter the original air inlet and outlet positions or bolt pattern. Bolt pattern head to block must be as original.
   Connection side of inlet and exhaust manifolds must be 90 degrees with head gasket or OEM.
   If there is any question of legality of cylinder head(s) it is up to the team to prove that the engine block and cylinder head combination is legal. If it cannot be confirmed that it is a legal combination ETPC will enforce the maximum penalty of a 1 year and 10 days ban for that tractor and team.
5. An intercooler is not allowed.
6. Water injection is allowed.
7. Fuel is allowed only in the runners to the intake port and head not in the intake manifold and tubing.
8. Camshaft must be in original OEM location for the engine type used.
9. Conversion from 4-stroke into 2-stroke is prohibited.
10. Downsizing or upsizing is allowed.
11. Maximum 1 (one) spark plug per cylinder.

E. Clutches

1. Only mechanically activated clutches are permitted. Hydraulic engagement is allowed.
2. Clutches and clutch protections: see chapter 2, par. D in this rulebook.

F. Shatter Blankets

1. Shatter blankets must be on the inside of the tiebar or one piece frame and the tiebar must be fastened forward of the rear of the engine block. However, in some occasions there is no space for the blanket inside of the tiebar or the one piece frame, in that case a written approval from ETPC or affiliated organization must be available to Tech inspectors.

G. Firewall/deflection shield

1. Steel deflection sheet between driver and engine from top of the hood to top of torque tubes or transmission or clutch housing from side shield to side shield, minimum 2 mm thick. This also serves as a flash fire shield.

H. Starting Chemicals

1. All ether bottles (or starting aids) must be placed outside of engine compartment.

I. On board fire control systems

1. Limited Super Stock tractors that require tools for removal of side shields must be equipped with an on board fire control system. On board system nozzles must be in engine compartment.
2. Limited Super Stock tractors utilizing on board fire control extinguishing systems must place one nozzle on each side of engine, inside the engine compartment. Not to be attached to the sheet metal.

J. Legality

1. If the ETPC or national organization doubts the legality of any entry, or upon protest by another contestant in that class, contestant in question must verify that 150 units of the tractor in question have been manufactured (notarized statement from the

manufacturer), furnish parts numbers, and prove to the Board's satisfaction that the tractor is legal.

K. Tires

1. Maximum rim size 38 inches.
2. Maximum tire size with 38"rim: 580/70R38 (20.8-38),
   with 34"rim 620175R34 (23.1-34)
   and with 32"rim: 650/75R32 (24.5-32).

Chapter 9a:

TRUCKS, FARM STOCKS & GARDEN PULLERS

The full ETPC Rulebooks for TRUCKS, FARM STOCKS & GARDEN PULLERS are available on the ETPC-website: www.tractorpulling.com.

Chapter 9b:

EXHIBITION VEHICLES

All vehicles participating in or exhibiting at any ETPC or affiliated organisation sanctioned event and hooking to a sled or sleds, must meet all ETPC safety requirements applicable.

Chapter 10:

OPERATION OF CONTEST

A. General rules

1. Pulling vehicles must be operated in a safe manner at all times within the confines of the track, pits and staging areas. Officials have the right to stop and disqualify any vehicle if it is not being operated in such a manner as would be considered safe.
2. Driver must remain seated while one or more engines of his vehicle are running. Leaving the seat is only allowed when all engines have completely stopped running. Driver must remain seated during the pull and must have complete control of the vehicle at all times.
3. Only the driver will be allowed on a vehicle when it is being towed or driven, NO riders in or on any vehicle, in pit, track or adjacent areas.
4. The driver and three helpers (two (2) at the start, one of them will leave the track after engine(s) are running) and one (1) at the end of the track) will be allowed to the track. Running with the tractor under green flag along trackside is forbidden. As track will be defined an area which includes the track and ten meters of space around the track. Violation of this rule will cause a disqualification of that pull.
   For a driver with one (1) helper the rule is as follows: The driver and one (1) helper will be allowed to the track. After assisting the driver at the starting line, the helper takes a position close to the public fence. Running with the tractor under green flag along trackside is forbidden. After the tractor has come to a standstill the helper can assist the driver. Violation of this rule will cause a disqualification of that pull.
5. If any driver or any of his crew is under influence of an intoxicating agent and or drugs, his/her pulling vehicle will not compete for the duration of the pull. Further, any puller or pit crew member found around the track area with intoxicant will forfeit winnings and points from that event or his/her pulling vehicle will be banned from the next sanctioned event he/she appears at to compete.
   If before the pull it is observed the driver is under inflluence of alcohol (more than 0,2 promille) the driver is not allowed to compete that day. Pulling machine is allowed to compete with another driver.
6. Unsportsmanlike conduct including abusive language and/or physical action toward an event official, fellow competitor, or spectator and/or deliberate delay of event, will be just cause for a minimum penalty of total disqualification from that event.
   Disqualified competitor will lose any prior placings, prize money, contingency money, points and/or event awards at that event.
   Disqualification of a competitor from an event is final, non-appealable, and non-reviewable.
   If behavior deems a more sever penalty, said penalty will be determined by ETPC and/or affiliated organisation board.
7. An attempt is defined as moving the sled a measurable distance.

8. All pulls made during a contest will be measured. All pulls will be measured from the starting line to the front of sled where it stops.
9. Pulling vehicles must remain within the track boundaries of contest course during a pull or will be disqualified. Sled pan must be within boundary lines at start of pull.
   Chalkline is to constitute track boundary.
10. Excessive loss of liquid by a pulling vehicle under the green flag, either in forward motion or standing still while hooked to the sled, will be cause for disqualification unless due to internal breakage. (Excessive is defined as any steady or intermittent stream discharged on the track, or a spot equivalent to more than 200 mm diameter).
11. If a vehicle is legal when hooked to the sled, and if breakage occurs while under green flag due to unforeseen circumstances - with the exception of loss of ballast or safety equipment - the pull will be measured.
12. If a class is interrupted due to rain, sledge breakage etc. and conditions are changed during qualification, resulting in restarting of the class:
    Any tractor having driven before the interruption, who is unable to come back to the sledge in the restarted class due to breakage etc. will receive points and prize money for last place in the restarted class.
    If a class is interrupted due to rain, sledge breakage etc. and conditions are changed during a pull off:
    All results from qualification will stand. Any tractor having driven in the pull off before the interruption, but is unable to come back to the sledge in the restarted pull off, will receive last place points and prize money in the pull off, ahead of any tractor who does not hook in the pull off at all.
    If more than one tractor cannot come back in this situation, points and prize money for the last places should be shared accordingly.
13. Only when the original mechanical method of starting fails to work, tow start will be authorized.
14. All pulling vehicles must be able to drive on the track and back up to the sled at the starting line. They must also be able to back up to unhook and drive off the track on their own power unless breakage occurs at the event or vehicle will be disqualified. If track circumstances (too much dirt or too deep holes) or technical problems with the tractor prevent the tractor from driving away from sled on its own power after pulling attempt, this will not be grounds for disqualification.
    Modifieds <950 kg are exempt from backing-up portion of this rule.
15. ETPC recommends that sled setting on international events will be done by sled operator together with the Senior Track Official. If the sled operator does not agree with the Senior Track Officials proposal, the Senior Track Official can, by his own decision, allow the sled operator to carry out first two (2) pulls with his setting.
    If the Senior Track Official is not satisfied with sled performance and/or sled setting, he can demand the setting to be changed. The final decision will be taken by Senior Track Official.
16. Violation of any rule can result in a disqualification.

17. In the case of a class not completed because of rain, sled breakage, etc. decisions are to be made by Track Official and/or Officials.
18. It is not allowed to drive a vehicle on its own power outside the closed area (track area and closed pit). Vehicles that make use of an auxiliary power unit are excluded from this rule.
19. The ETPC Tech and Safety Board has the right to take possession of any part(s) of a competing vehicle for closer inspection when necessary. After the inspection, the part(s) will be returned to the pulling team in question.
20. At an evening pull (when it becomes dark) all working people on the track must wear a fluorescent vest.

B. Track and track officials

1. - All official contests must have available a dirt track of 100 meters length and not less than 10 meters in width.
   - A safety run off area of 30 meters is required. Width has to be an acceptable exit.
   - A minimum width of 10 meters on each side of the track is required as safety area.
   - At indoor pulls the measurements of the track area can be different.
2. Crash barriers with a height of 60-75 cm are mandatory on both sides of the track at Euro Cups and European Championships. It is highly recommended for the distance of crash barrier to be a minimum of 7 meters from the track, minimum of 2.5 meters from the spectators.
3. All tracks must be maintained and packed after each pull.
4. No one is allowed on the track except for the Track Officials and contestant when the vehicle is under the green flag. Track is defined as the area within 0.5 meters in any direction of the contest course boundaries, including the run off area at the end of the track.
5. All pulls shall operate with two flagman. The starting flagman will be responsible for readiness of track, sled and contestant. The second flagman will be responsible for balance of course.
6. Pulling or leaving the starting line under the red flag will be cause for disqualification.
7. Sled will be towed or driven back or forward to starting line before each attempt. No official pull may start beyond starting line in either direction. All sleds have to be started with front of pan even with starting line and in gear.
8. Each contestant has the privilege of, and the responsibility for spotting the sled for both of his/her attempts. Pull back tractor/-loader or sled operator must be notified of where contestant wishes sled placed when previous contestant unhooks from the sled. Use of crew members is recommended for spotting the sled to expedite the show.
9. Penalty Cards: In many sports coloured cards are used to warn people they have done something wrong and give a warning. If so the Head Track Marshal will hold the card above his/her head while looking or pointing to the driver/ team member who committed the offense.

The colour of the card shows the seriousness of the offence and the level of punishment:

.- Blue card: don't do it again, it is only a warning.
Second blue card (in calendar year) results in a yellow card.

.- Yellow card: competitor loses 2 points in the championship.
Third yellow card (in calendar year) results in red card.

.- Red card: competitor is disqualified for that event (no points, no money).

At the end of the calendar-year all cards expire.

C. Test pulls and options

1. Number one puller will be the test puller and may take his/her pull if the sled setting is deemed right. In case it was a test pull, the test puller will pull again after six (6) competitors have made their pulling attempts.
2. The number one or test puller is not disqualified or measured for running out of bounds on first attempt only. He is to be disqualified on second or subsequent attempts if he goes out of bounds.
3. If weight transfer needs further adjustment, the first puller after each adjustment will be treated as the number one or test puller.
4. All pulls must start with a tight chain. Each competitor will be allowed max. two attempts to make a measureable pull.
   a. An attempt is defined as moving the sled a measurable distance (one (1) cm. or farther).
   b. On his/her first attempt, if the competitor stops before max. 30.00 meters, said competitor will get a second attempt (distance measured with laser measuring device). Result of first attempt will fall. The intent is for drivers not to slam the brakes to stop before 30.00 meters (or at any time), but to come to a smooth and safe stop.
   Jerking the sled by backing out of the throttle will be considered a ground for disqualification by Track Officials. Track Officials will use their own judgment on this call.
5. There will be no maintenance on the track before the second attempt.
6. If the class is restarted, all contestants having pulled previously will have the same options as the number one puller. In the case of a restart it is the competitors responsibility to inform Track Official of his/her decision.
7. A class can be re-started if the first five competitors have made a full pull.
8. A driver's decision on a re-pull has to be made latest after 2 tractors. Before the 3rd one starts, the competitor has to inform Track Official/ Flagman.
9. Any disqualification on the first attempt bars a second attempt. Should the class be restarted, disqualified contestant will be allowed to pull in position drawn. Unless the disqualification was a result of unsportsmanlike conduct.
10. Contestants must pull at position drawn within three minutes after sled is at readiness. Any delay will mean disqualification. If presiding track jury is notified he may drop six positions. This may be done only once per contestant per class.

Dropping 6 positions only once in an Euro-cup season per class.

11. If a contestant experiences mechanical problems during a test pull (before first official pull), Track Official may grant the contestant the option of dropping to sixth or last position.
12. Contestant will be able to drop six places if breakage occurs on first attempt, if not past 30.00 meters. He will get a total of two chances.
13. If the last vehicle in a class experiences mechanical problems, it should be allowed six minutes to hook and make an attempt.
14. On any re-pull caused by a contest malfunction, the puller may, at his discretion, drop six positions.
15. When a competitor is test puller and the sled is reset after his pull to a lighter sled-setting, he is allowed to take that pull.
16. Each tractor passing the Full Pull line, normally 100m, automatically qualifies for the Final (Pull Off).
    For ETPC competitions the defined minimum number of tractors in the Pull Off is 5.
    Each tractor passing the Full Pull line automatically qualifies for the Pull Off.
    There can also be more than 5 tractors in the Pull Off if they pass the Full Pull line in qualification but NEVER less than 5.
    If there are less Full Pulls than the defined minimum number (5), the next best distances BELOW 100m but ABOVE 90m qualify for the Pull Off.
    Rule definition: Any ETPC tractor not reaching 90m in their first attempt (exept test pullers) are not able to qualify for the final under any circumstances.
    If an ETPC class is run together with a National class any National tractor will qualify for the final according to the National competition rules advised for that event.

D. Pull offs

1. In a pull off each contestant in his/her turn will be allowed two attempts to make a measurable pull, if not past 30.00 meters.
2. The sled should be re adjusted if the first contestant fails to reach 38 meters (at Eurocups and European Championships 60 meters) provided that the pulling vehicle performs well: possible re-adjustment is at the discretion of the Track Jury.
3. If the first contestant succeeds in making a full pull, all contestants must pull at that setting unless in the Track Officials opinion, the sled operator has made a mistake.
4. A floating finish line - with a 10 meter maximum - may be used at the discretion of the Senior Track Official and/or Track Officials and only in a pull-off situation. Extended boundaries must be clearly chalked. Competitors must be informed in advance at the drivers meeting and before the pull off. Run-out area needs to be a minimum of 40 meters.
   If all competitors in a second pull off agree to take the measured distance of first pull off, track jury may decide to skip the second pull off.
5. Order of pull will be in the order in which the vehicles involved made full pulls, unless there has been a sled setting change by Track Official.

No dropping six positions in a pull off.

6. If a pull off is not run on the same track, or with the same sled, or the same day, the first puller will have the option of taking the first pull or drop six places.

E. Summary of causes for disqualification

1. Loss of ballast weight under the green flag.
2. Loss of safety equipment, and failure of safety equipment to function while under the green flag.
3. Excessive loss of liquid (steady or intermittent stream discharged on the track or a spot equivalent to more than 200 mm in diameter) under the green flag.
4. Use of illegal fuel (nitromethane, nitrous oxide or other oxygen carriers, or combustion accelerators).
5. Out of bounds (pulling vehicle only), touching the chalk line.
6. Unsafe operation of competing vehicle.
7. At indoor pulls diesel, super stock or modifieds with excessive exhaust leakage or exhaust extension collapse.
8. Use of illegal equipment.
9. Leaving the starting line under the red flag.
10. Penalty for intentional use of illegal drawbar shall be suspension of membership and loss of points for one year and ten days from date of infraction.
11. Any knowing violation of any rule shall be considered illegal. Severity of punishment to be at the discretion of the ETPC or affiliated organisation.
12. The decision of the International Jury or Track Officials is final and shall not be appealable; provided, however, that with a showing of reasonable and good cause, the International Jury or Track Officials may, without liability, reverse or revise their decision. Calls of judgment are not subject to appeal and shall be final.

F. Protests

1. Any contestant who feels that another contestants vehicle is illegal may protest that vehicle. Team captain can protest in name of participant by the International Jury. The deposit will be 400 Euro; if the vehicle is legal, the deposit will be forfeited; if the vehicle is illegal, protester would get deposit refunded. The protest must be in writing and submitted to the Jury before that particular class is finished.
2. A period of one day will be allowed for an ETPC representative to look over the vehicle: during this time the vehicle will be allowed to compete.
3. Protests on fuel or engine displacement must be made before vehicle in question leaves the track, the deposit will be 500 Euro.

G. Environmental protection and Safety rules

1. On all pulling vehicles, the oil pan and valve cover ventilation pipes, overflow and other drain pipes have to be connected to a liquid collector tank, so that there is no leakage of any kind from the vehicle.

2. It is mandatory for all pulling vehicles to have a piece of plastic or other impervious material underneath the vehicle on the parking place at the pits. After competition, this ground protection including possible liquid has to be taken away by the team, liquid not to be spilled on the ground.
3. In the track area, there must be a minimum of six (6) full water barrels, three (3) on each side of the track, with a minimum volume of 60 liters and buckets with a minimum volume of 10 liters with each barrel, and separate trained personnel to use the equipment in case of a fire.

Chapter 11:

EURO CUP and EUROPEAN CHAMPIONSHIP PULLS

A. Requirements for Euro Cup and European Championship pulls

1. The European Championships are run with the current classes in Europe, these classes are: Prostock, Superstock, Light Modified, Modified, Heavy Modified, Mini Modified
   And with a pot of four classes, to choose at least one of them for each event. Those classes are: Two Wheel Drive, 3.6 ton Super Sport, 4.5 ton Super Sport, Limited Super Stock
   The choice of the extra class or more classes, is made by the promotor in cooperation with the Daily Board.
   Note: ETPC board can decide to have more classes in the coming years. Rule is subject to changes.
   Every year the ETPC board decides, in consultation with the organizer of the European Championship, the sequence and the number of pulls for qualification in each class.
2. Organizer must have available a dirt track, stonefree and hard bottom of 100 meters length and not less than 10 meters in width. A safety run off area of 40 meters is required. Width to be an acceptable exit. A minimum width of 10 meters on each side of the track is required as safety area.
3. The weighbridge must be ETPC approved and big enough to weight the entire tractor in at once.
4. The sleds in all classes must be EC Gold sled.
   Note: Big sleds classed as Silver can also run three classes (incl. 4,5 ton modified) to nominate for EC Gold sled.
   Modified <950kg classed as Silver sled can also run a complete modified 950kg class to nominate for EC Gold sled.
5. ETPC approved laser measuring device for distance measuring (proven design, functionality and reliability).
6. ETPC approved roller and scraper (proven design, functionality and reliability).
7. All purse money on European Championship pulls is based on Euro currency.
8. The awards for the European Championship pulls will be supplied and paid for by the organizer of the pull.

B. Procedures for Euro Cup and European Championship Pulls

1. On each location there will be a designated area, set up by the track official, as a tech area where all vehicles will be routinely inspected. The same applies for weighing and drawbar measuring.
2. A competitor may enter late with the permission of the International Jury. However, the International Jury must be notified prior to 10.00 a.m. that the competitor wishes to enter late in order for the competitor to be eligible for pulling the same day.
3. At any Euro Cup pull or European Championship pull, it is mandatory for all drivers or representative to attend any particular drivers meeting which may be held by the International Jury.
   Driver or representative not attending drivers meeting without notifying will receive a penalty of 100 Euro. The penalty must be paid to the ETPC before end of the event.
4. If competitor withdraws from the class prior to the start, the competitors organisation has the right to replace the entry.
   If competitor's national organisation cannot replace the entry, the organizer of the European Championship can replace the entry to a maximum of three (3) per event.
5. All pulls shall operate with two flagman. Starting flagman will be responsible for readiness of track, sled and contestant. Second flagman will be - together with International Jury - responsible for balance of course.
   Flagmen must be approved by the ETPC.
6. On European Championship pulls sled setting will be done by sled operator together with the ETPC International Jury. If the sled operator does not agree with Jurys proposal, the Jury can, by their own decision, allow sled operator to carry out first two (2) pulls with his setting. If the Jury is not satisfied with sled performance they can demand the setting to be changed.
   The final decision will be taken by the International Jury.
7. In case a class is not completed because of rain, sled breakage, etc. decisions must be made by the head track marshall and the DB representative.
8. a. If the main sled breaks it has to be fixed within 30 minutes. After 10 minutes the sled crew must be able to say if they can fix it within the time limit or not.
   b. If the back-up sled breaks the same rule applies.
   c. Head track marshall can grant an extension based on the situation. This extension will be notified and specified within the 30 minutes.
   d. Communication through driver's delegate ONLY.
   e. If both sleds are broken and can't be fixed within the time limit the class will be neutralized according to the description in the rule book.
   f. Back-up sled must be competition ready at all times - unloaded from truck, warmed up and ready to hook in front of in 15 minutes.
9. In the case of a rainout/cancelation of the event, starting money will always be paid out. Price money will only be paid out if the class is finished 50% or more. When the pull off is not completed, the price money will be divided over the whole class.
10. In case of a rain out, ETPC Eurocup and/or European Championship contract rules are to be fulfilled.

Chapter 12:

LIMITS

A. General rules

1. The following limits will be effective for all classes on all levels of competition in Europe on events/pulls sanctioned by the ETPC or affiliated organisation.
   The limits regarding Modifieds, Super Stock, Pro Stock, Modifieds < 950 kg, Two Wheel Drives and Trucks are set for a period of six (6) years, effective from January 1, 2020.
   Two years before the end of the period, new limits will be set for the next period.
2. Limits will be checked by (ETPC or national) Tech and Safety Board in consultation with the competitor.
3. Violation of limits will be sanctioned:
   - Driver, tractor or any combination thereof, all team members and all parts of the vehicle will be suspended and banned from participation in events or demonstration-pulls, sanctioned by the ETPC or affiliated organisation, for a period of one (1) year and ten (10) days from the date of the last violation.
   - The competitor will lose any prior placings, prize money, contingency money a points and/or event awards at that event.
4. In case of over limited engines on the vehicle, it must be clearly shown that this (these) engine(s) are not running during the pull (e.g. by covering the inlet or outlet).
5. Super Stocks, Pro Stocks, Limited Super Stocks and Two Wheel Drives must have two (2) oil pan bolts with a *3 mm* hole in bolt head. These two (2) bolts must be placed on one side of the oilpan, next to each other.

one cubic inch (c.i.) = 16,3871 cubic centimetres (cc)

B. Limits

1. Modified classes (>950 kg)

Light modified (2,5 ton): max. 60 engine points

Weight compensation 2024:

- 51-60 engine points:	0 kg extra weight allowed
- 43-50 engine points:	100 kg extra weight allowed
- 42 or less engine points:	200 kg extra weight allowed

Modified (3,5 ton): max. 85 engine points

Weight compensation 2024:

- 70-85 engine points:	0 kg extra weight allowed
- 60-69 engine points:	100 kg extra weight allowed
- 59 or less engine points:	200 kg extra weight allowed.

Heavy modified (4,0 ton): max. 105 engine points
- no extra weight allowed

Point system for engine combinations in Modified classes (>950 kg):
(For OEM engines first production date before 1955 see point H, I, J and K.)

A. Automotive V8, wedge style heads that accepts a stock OEM intake manifold bolt pattern. (billet heads not permitted)

1. naturally aspirated ..... 8 points
2. max. blower 8-71, max. 70 % overdrive ..... 18 points
3. max. blower 8-71 ..... 25 points
4. single stage turbocharged
   or max. one charger of any other type ..... 26 points
5. any other charging system ..... 26 points
6. max. blower 14-71 with max. 50% overdrive ..... 25 points

B. Automotive V8, wedge style heads without a stock OEM intake manifold bolt pattern. (billet heads not permitted)

1. naturally aspirated ..... 10 points
2. max. blower 8-71, max 50% overdrive ..... 20 points
3. max. blower 8-71 ..... 26 points
4. max. one (1) turbo pressure stage,
   or any other system using one (1) pressure stage . 26 points
5. any other charging system ..... 26 points
6. max. blower 14-71, max. 55% overdrive ..... 25 points

C. Automotive V8, any other style heads incl. Hemi

1. naturally aspirated ..... 12 points
2. max. blower 8-71, max. 40% overdrive..... 21 points
3. max. blower 14-71, max 40% overdrive ..... 26 points
4. max. blower 14-71 ..... 35 points
5. one (mechanically operated) charger of any kind ... 26 points
6. max. one pressure stage turbo..... 26 points
7. any other pressure system ..... 26 points

D. Piston engines other than A, B or C, max. 510 c.i. (8363 cc) max. 8 cyl.

1. naturally aspirated ..... 15 points
2. one pressure stage (petrol & diesel)..... 20 points
3. one pressure stage (alcohol) ..... 22 points
4. any other pressure system (petrol & diesel) ..... 22 points
5. any other pressure system (alcohol)..... 27 points

E. Piston engines other than A, B or C, max. 650 c.i. (10650 cc) max. 8 cyl.

1. naturally aspirated ..... 12 points
2. one pressure stage (petrol & diesel)..... 25 points
3. one pressure stage (alcohol) ..... 34 points
4. any other pressure system (petrol & diesel) ..... 28 points
5. any other pressure system (alcohol)..... 36 points

F. Piston engines other than A, B, C, D or E, max. 1050 c.i. (17200 cc), max. 10 cyl.

1. naturally aspirated ..... 16 points
2. one pressure stage (petrol & diesel) ..... 30 points
3. one pressure stage (alcohol) ..... 35 points
4. any other pressure system (petrol & diesel) ..... 33 points
5. any other pressure system (alcohol) ..... 42 points

G. Piston engines other than A, B, C, D, E or F, max. 1500 c.i. (24570 cc), max.12 cyl.

1. naturally aspirated ..... 20 points
2. one pressure stage (petrol & diesel) ..... 15 points
3. one pressure stage (alcohol) ..... 24 points
4. any other pressure system (petrol & diesel) ..... 21 points
5. any other pressure system (alcohol) ..... 26 points

Note: point H, I, J and K: only for OEM engines first production date before 1955.

H. Piston engines other than A, B or C, < 1675 c.i. (27448 cc) (e.g. RR Merlin, Meteor)

1. naturally aspirated ..... 9 points
2. one pressure stage (petrol and diesel) ..... 15 points
3. one pressure stage (alcohol) ..... 24 points
4. any other pressure system (petrol and diesel) ..... 17 points
5. any other pressure system (alcohol) ..... 27 points

I. Piston engines < 1800 c.i. (29314 cc) (e.g. Allison or Continental)

1. naturally aspirated ..... 11 points
2. one pressure stage (diesel) ..... 15 points
3. one pressure stage (petrol) ..... 17 points
4. one pressure stage (alcohol) ..... 26 points
5. any other pressure system (diesel) ..... 19 points
6. any other pressure system (petrol) ..... 20 points
7. any other pressure system (alcohol) ..... 35 points

J. Piston engines < 2500 c.i. (40963 cc) (e.g. RR Griffon, Packard, Transmash)

1. naturally aspirated ..... 17 points
2. one pressure stage (diesel) ..... 21 points
3. one pressure stage (petrol, original water methanol injection allowed) ..... 33 points
4. any other pressure stage (diesel) ..... 30 points
5. any other pressure system (petrol, original water methanol injection allowed) ..... 36 points
6. original supercharger, (alcohol) low gear* ..... 38 points
7. any other pressure system (alcohol) / original supercharger (alcohol) high gear* ..... 43 points

**note: combination J6 and J7 not allowed in modified class*

K. Piston engines < 4500 c.i. (73742 cc), max 28 cyl.

1. naturally aspirated ..... 20 points
2. one pressure stage (diesel) ..... 24 points
3. one pressure stage (petrol) ..... 39 points
4. one pressure stage (alcohol) ..... 45 points
5. any other pressure system (diesel) ..... 53 points
6. any other pressure system (petrol) ..... 60 points
7. any other pressure system (alcohol) ..... 65 points

L. Turbine engines

Lycoming T53-L-1 ..... 13 points
Lycoming T55-L11-D ..... 50 points
Rolls Royce Gem 42 ..... 12 points
Rolls Royce Gnome H 1000 ..... 14 points
Rolls Royce Gnome H 1200 ..... 14 points
Rolls Royce Gnome H 1400-1 ..... 20 points
Isotov/Klimov TV2-117 low output version *see remark 2 . 20 points
Isotov/Klimov TV2-117 high output version *see remark 2 22 points
Isotov/Klimov TV3-117 Mi-14 version ..... 26 points
Isotov/Klimov TV3-117 other versions ..... 26 points

M. Smaller automotive engines

Engine-displacement	*naturally aspirated*	*with any charging system*
Max. 1000 cc	1 point	2 points
Max. 2000 cc	2 points	3 points
Max. 3000 cc	3 points	5 points
Max. 4000 cc	4 points	6 points
Max. 5000 cc	5 points	8 points
Max. 6000 cc	6 points	10 points
Max. 7000 cc	7 points	12 points

Remarks

1. Interpretation of 'any pressure system': any combination of superchargers and/or turbochargers in more than one pressure stage.
2. Every Isotov/Klimov TV-2 is given 22 points until the ETPC receives information to make a distinction between the versions.
3. The number of naturel-aspirated V8 engines on Modified tractors is unlimited, but in combination with charged engines they get points as mentioned.
4. If for any given combination bonus weight is applicable, this bonus weight does not need to be removable.
5. All tractors with only automotive V8 engines falling under point B and C in the engine limit system not allowed to add any weight. Tractors equipped with only naturally aspirated engines receive max. compensation in weight.
6. Maximum measurements Roots type blowers (inside measurements)

8-71:	length rotor:	407 mm (16 inch);
	width rotorcase:	286 mm (11.25 inch).
14-71:	length rotor:	483 mm (19 inch);
	width rotorcase:	286 mm (11.25 inch).

Helix restricted to a max. rotor spiral of 6.5 degrees per inch of rotor length.

7. Every engine not mentioned in the point system is illegal as long as there is no approval of the ETPC.
8. Charged engines as in point C: max. two (2) engines in light modified, max. three (3) engines in modified, and max. four (4) engines in heavy modifieds. Engines from point A or B (or a natural aspirated from C) may be added if weight and points allows.
9. Power setting turbine engines max. 100%.
10. Smaller automotive engines: engineblock with waterjackets cast into the block, stock boltpatern intake manifold and stock boltpatern heads.

2. Super Stocks

- Maximum of three pressure stages with a maximum of four turbos
- Maximum engine size 650 c.i. (10650 cc); see chapter 3
- Limited to two valves per cylinder, except when factory-produced with more (in case of a dispute it is the pullers responsibility to prove that head is factory-produced for farm stock tractors).

3. Pro Stocks

- Maximum of one (1) turbocharger
- Maximum engine size 510 c.i. (8364 cc) with 2 and multi-valve head

4. Limited Super Stocks

Maximum of one turbocharger
Maximum engine size 466 c.i.(7636 cc): turbo inlet max. 108 mm or restrictor 108 mm.
Engine size >466 c.i. (7636 cc) and max 510 c.i. (8357 cc): air inlet restrictor 102 mm.

5. Modifieds <950 kg

No limits.
Weight compensation: tractors with piston engines other than A, B or C (see page 84) are allowed to have 20 kg extra weight.

6. Two wheel drives

Allowed is maximum one (1) piston automotive type engine. An automotive type engine is any engine or its replica available in a passenger car. A replica is considered legal if the original crankshaft fits in het engine without any changes. A maximum of eight (8) cylinders are allowed.
Only methanol or petrol is allowed as fuel.
Maximum Roots type Blower size: 14-71.
Engine sizes:

a. V8 with wedge style heads
   1. with blower: max. 540 cubic inch, max. 2 valves per cylinder
   2. with turbocharging: max. 500 cubic inch, max. 2 valves per cylinder
   3. blower and turbocharging: max. 500 cubic inch, max. 2 valves per cylinder

Limits on valve-angles (wedge style heads):
angle intake valve: min. 12 degrees, max. 27 degrees.
angle exhaust valve: min. 6 degrees, max 18 degrees.

b. V8 with hemi style heads:
   1. with blower: max. 500 cubic inch
   2. with turbocharging: not permitted

c. Motor with more than two (2) valves per cylinder (max. 5):
   1. blower and/or turbocharging: max. 360 cubic inch
   Other types of charging on any type: not permitted in Two Wheel Drive class.

Chapter 13:

ETPC SAFETY PROGRAM

A. Approved manufacturers

Multiple disc clutch assemblies: Ace Mfg & Parts Co.; Advance Clutches; Allied Precision Products; Applied Friction Techniques; Atlas Tractor Company; Crower Cams & Equipment Co.; Eagle Clutches Finland; East-West Engineering; Exedy America Corp.; Hays Clutch; Hypermax Engineering Inc.; L&T parts Inc.; Ram Automotive Co.; RF Enterprises; Rursch Specialty; SSG Engineering Products Inc.; Stroud Safety; Titan Speed Engineering; Van der Waal Clutches Netherlands.

Shatterblankets: Belport Belgium; Clifton Blankets UK; DJ Safety inc.; Holland Blankets Netherlands; Security Race Products; Stroud Safety.

Turbineblankets: Belport Belgium.

Bellhousings: Boninfante Racing; Browell Bellhousing Inc.; Probell Racing; Trick Titanium Inc.

Blower restraints - devices: Deist Safety Equipment; Don Gerardot Racing; J & S East Valley Garage; Mike Kuhl Enterprises; Speciality Automotive Engineering Inc.; Stroud Safety; TAK Racing Enterprises; Tayor Motorsports Products.

Blower restraints - straps: SES Netherlands, Zimmermann Restrains Germany.

High performance harmonic balancers: ATI Racing Transmissions Inc.; B.H.J. Products; C.A.T. Power Engine Parts, Cyco System Pty Ltd; Innovators West; Precision Cam Drives Pty Ltd; Precision Parts Pty Ltd; TCI Automotive; Vibratech/Unit of Index Corp.

ALL SAFETY ITEMS PERMITTED BY THE NTPA ARE ACCEPTED BY THE ETPC.

B. Age limits for safety equipment

The age of blower restraints, fire suits and shatterblankets must not exceed the limits given below.

1. Blower restraints
   The maximum age of blower restraints (straps) is six (6) years, if not given a shorter warranty by manufacturer.
2. Fire-suits
   The maximum age of Nomex fire suits is six (6) years, for suits made of other materials two (2) years.
3. Shatterblankets
   The maximum age of shatterblankets is five (5) years, if not given a shorter warranty by blanket manufacturer.

The age of safety equipment has to be documented, see chapter 2, rule 9 in this rulebook.

Note: See also ETPC T&S Letter: Clutch inspections and safety equipment checks when not used in competition during 2020 on the official ETPC website.

Chapter 14:

ROLL OVER PROTECTIONS

1. The Driver Roll Over Protection (ROP) has been designed in co-operation with specialists in order to protect the driver in the event of his vehicle tipping over during a tractor pulling competition or demo pull.
2. The design, or the ROP built according to the given specifications, are not to be understood as an automatic guarantee, as for providing an always adequate protection for the driver during an accident with the vehicle.
3. The ROP specifications must be seen as a set of minimum requirements and advisory guidelines.
4. Neither the ETPC Board, the ETPC Tech and Safety Board nor any of their members can be held responsible for consequences resulting from the ap-plication of the ROP specifications or malfunction of the safety devices in question.

A. General Considerations

1. The construction must allow an easy exit for the driver in the event of a fire etc.
2. Tractors weighing more than 4000 kg are recommended to have a tube wall thickness 0.5 mm higher, or more, than specified.
3. If team drivers or tractor constructors think that the ROP constructions specified below are not solid enough, they are free to make them stronger.
4. All NTPA certified ROP cages are permitted by the ETPC.
5. No ballast can be hung from or attached to any portion of the ROP-structure. Chassis-attachment is exempt of this rule.

B. Construction

1. Bending radius of all tubing should be as wide as possible, the minimum is two (2) times the outside diameter of the tube being bent.
2. All fastening bolts must be grade 8.8 or better, this must be clearly marked on the head of the bolt.
3. All welded joints must be welded by an experienced professional. A steel filler metal must be employed that is compatible with the base metal.
4. All welding must be done according to generally accepted welding practices.
5. No grinding on any welding.
6. All structural material for the ROP shall be seamless mild steel (carbon mechanical) tube or normalized chrome molybdenum (DIN 25 CrMo 4) or Docol R8 seamless steel tube.
7. Tubing diameters and wall thicknesses are nominal measurements.
8. The dimensional locations of the main structural hoops and secondary tubing shown in the figures are to be used as guidelines but must remain within 20% of the dimensions specified in the figures.

The maximum backward inclination of the cage is 20 degrees.

9. **Tubing size and material shown in the figures and tables are minimum requirements!**
10. There shall be a minimum of 50 mm between the main hoops and the drivers helmet, both vertically and laterally, with the driver seated in normal position.
11. In order to avoid possible neck injury, the horizontal distance between the main hoops and the drivers helmet must not be over 200 mm.
12. It is recommended that the fastening construction of the ROP cage to the vehicle frame is significantly stiffer than the ROP itself.
13. It is also recommended that the driver's seat should be so constructed that it provides adequate back and shoulder support during an accident. The seat should be mounted to the ROP cage, or the lower support structure with at least four (4) M8 grade 8.8 bolts. The seat back should be bolted to the rear main hoops, and the seat should include a head rest.
14. The use of a 4-point seat belt or better is mandatory. The seat belt must be attached to the roll cage.

C. Remarks

The ETPC Tech and Safety Board will allow options 'B' or 'C' to be applied where 'A' is not technically possible (see drawings).

1. If 'A' is used, then both hoops from rear to front must be of one-piece tube.
2. If 'B' or 'C' is used, an additional tube 'S' must be added to the ROP, and the front hoops must be out of ONE piece.
3. If 'C' is used, then the both side-to-side hoops must be out of one-piece tube. In general, you should have as few welds as possible and do them according to the drawings. Basically, no welds are allowed on the main hoops, if you must weld a main hoop, please ask the ETPC Tech and Safety Board.
   It is highly recommended to move the front hoop aft to allow quick exit in the event of fire or other mishap.

See next pages for drawings/illustrations and dimensions.

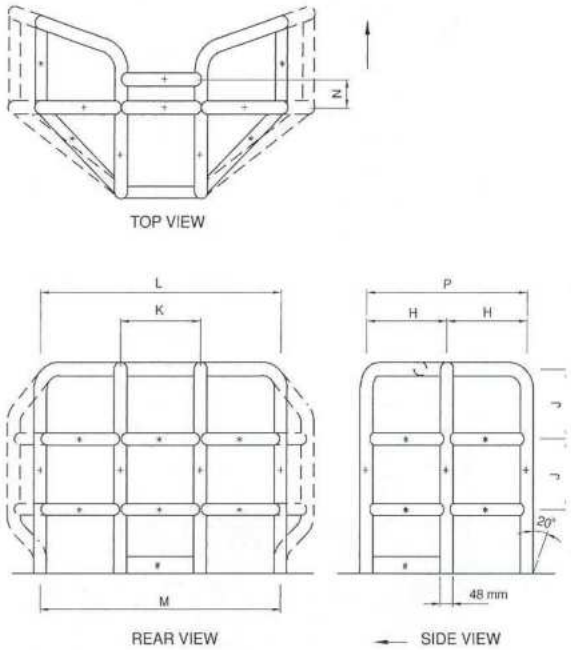

Illustration 14-1: driver roll-over protection A

DRIVER ROLL OVER PROTECTION A

		Mild steel	*Chrome molybdenum or Docol R8 steel*
	Min. outside diam.	*Min. wall thickness*	*Min. wall thickness*
tube " + "	48 mm	3.0 mm	2.5 mm
tube " * "	42 mm	3.0 mm	2.5 mm

# = support webs of 6 mm thick and 80 mm high to be welded between vertical tubes on both sides of rear tubes and to the bottom structure.
H = minimum 200 mm
J = 250 mm
K = 200 mm
L = optional, but upper shape must have minimum 50 mm clearance (vertical and horizontal) and maximum 200 mm clearance (horizontal) to drivers helmet to avoid neck injury.
M = width, dependent upon specific vehicle.
N = 100 mm (min.)
P = 600 mm (max.)
← = forward driving direction
---- = options for construction

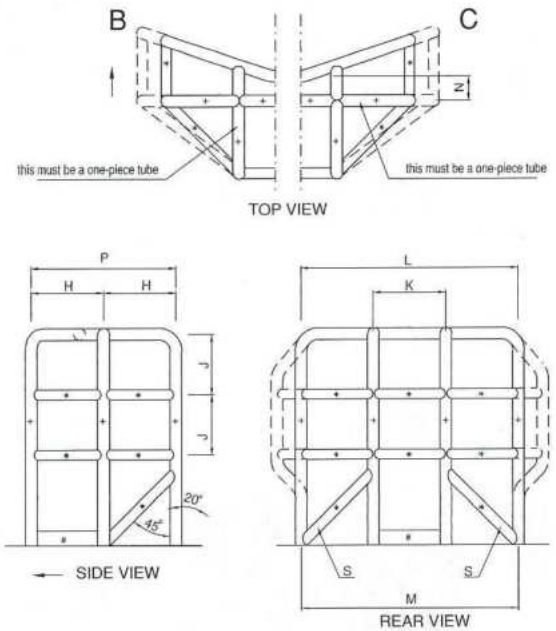

Illustration 14-2: driver roll-over protection B/C

DRIVER ROLL OVER PROTECTION option B and C

		Mild steel	*Chrome molybdenum or Docol R8 steel*
	Min. outside diam.	*Min. wall thickness*	*Min. wall thickness*
tube " + "	48 mm	3.0 mm	2.5 mm
tube " * "	42 mm	3.0 mm	2.5 mm

# = support webs of 6 mm thick and 80 mm high to be welded between vertical tubes on both sides of rear tubes and to the bottom structure.
H = minimum 200 mm
J = 250 mm
K = 200 mm
L = optional, but upper shape must have minimum 50 mm clearance (vertical and horizontal) and maximam 200 mm clearance (horizontal) to drivers helmet to avoid neck injury.
M = width, dependent upon specific vehicle.
N = 100 mm (min.)
P = 600 mm (max.)
← = forward driving direction
---- = options for construction

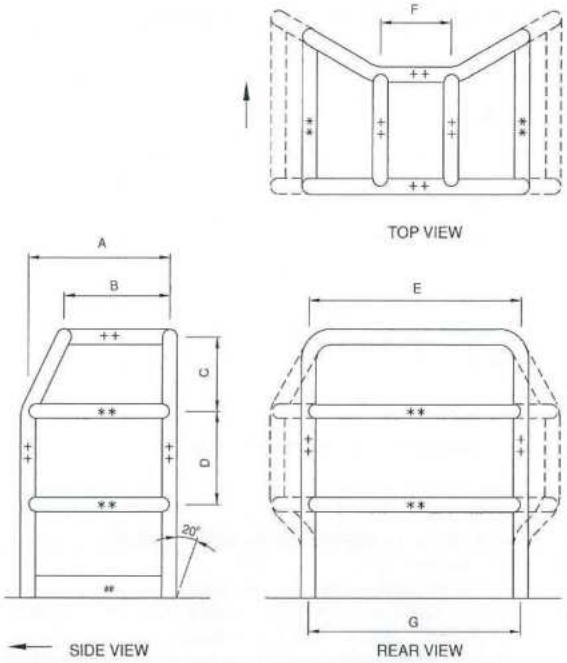

Illustration 14-3: driver roll-over protection modified-tractors <950kg

DRIVER ROLL OVER PROTECTION MODIFIED <950 kg

		Mild steel	*Chrome molybdenum or Docol R8 steel*
	Min. outside diam.	*Min. wall thickness*	*Min. wall thickness*
tube " + "	42 mm	2.5 mm	2.0 mm
tube " * "	38 mm	2.5 mm	2.0 mm

= support webs of 6 mm thick and 50 mm high to be welded between vertical tubes on both sides of rear tubes and to the bottom structure.
A = minimum 400 mm / maximum 600 mm
B = minimum 300 mm
C = 200 mm
D = 250 mm
E = optional, but upper shape must have minimum 50 mm clearance (vertical and horizontal) and maximum 200 mm clearance (horizontal) to drivers helmet to avoid neck injury.
F = 200 mm
G = width, dependwnt upon specific vehicle
← = forward driving direction
---- = options for construction

ROP-CAGE MOUNTING ON TUBE TYPE CHASSIS

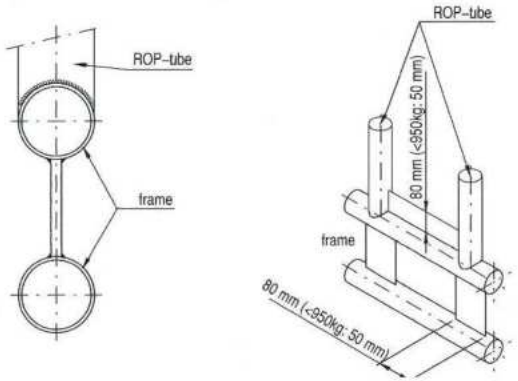

Illustration 14-4: Mounting ROP on tube type frame

Recommendations regarding mounting the ROP-cage to any tube type chassis:

- Vertical ROP-cage supports can be welded directly to horizontal tube frame structure.
- Use steel supports to be installed directly between horizontal frame tube and in line with each vertical ROP-cage tube, this steel supports of min. 80 mm x min. 6 mm (min. 50 mm x min. 6 mm for modifieds <950 kg) must extend to the next horizontal frame tube directly below.
- Rear ROP-cage vertical tubes can be welded directly to a rear structure same as the side frame. This rear frame structure can be welded to the vehicle frame.
- Support webs of minimum 80 mm x minimum 6 mm (minimum 50 mm x minimum 6 mm for modifieds <950 kg) can be welded between vertical tubes on both sides and rear tubes.

ROP-CAGE MOUNTING TO OEM REAR-END HOUSING

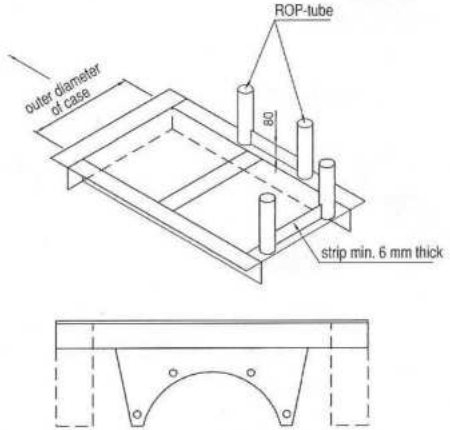

Illustration 14-5: Mounting ROP on OEM rear-end housing

Recommendations regarding mounting the ROP-cage to any stock OEM rear-end housing:

- Try to create a rigid one piece assembly on vehicle rear-end for maximum strength.
- Do not use material thinner than 6 mm.
- Create two 'U'-shape attachment flanges to use the side flange bolts minimum four (4) each side) to keep the assembly in place.
- Use four additional bolts (min. M12 grade 8.8) to attach the assembly to the axle housing, two before and two after the axle housing. Weld the assembly together solidly without grinding on any welding.
- Support webs of minimum 80 mm x minimum 6 mm (minimum 50 mm x minimum 6 mm for modifieds <950 kg) vertical from base plate must be welded between vertical tubes on both sides and rear tubes, to create a solid connection from ROP-cage to rear-end.

ROP-CAGE MOUNTING ON CHANNEL TYPE CHASSIS

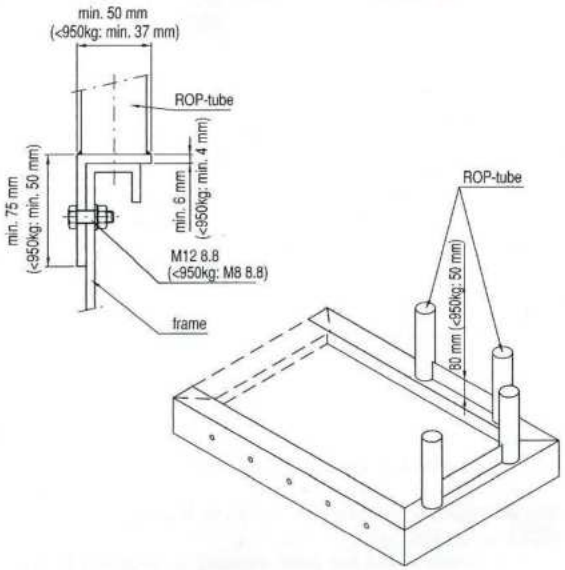

Illustration 14-6: Mounting ROP on channel type frame

Recommendations regarding mounting the ROP-cage to any channel type chassis:

- Vertical ROP-cage supports can be welded to a single piece of min. 6 mm thickness steel with a minimum 50 mm horizontal flange and 75 mm vertical flange (angle iron).
- Attachment flanges should be secured to vertical side of frame by at least five (5) M12 grade 8.8 or better bolts.
- Rear ROP-cage vertical tubes can be welded to a minimum 6 mm thickness steel flange (with at least same dimensions as side flange).
- Rear mounting flange to be welded to the side flanges or vertical frame rails and must have supports directly below ROP-cage rear tubes, which can be bolted or welded to vehicle frame or rear-end.
- Support webs of 6 mm thick and 80 mm high (50 mm high for modifieds 950 kg) to be welded between vertical tubes on both sides and rear tubes.

REMOVABLE UPPER PORTION - OPTION WITH SLEEVES

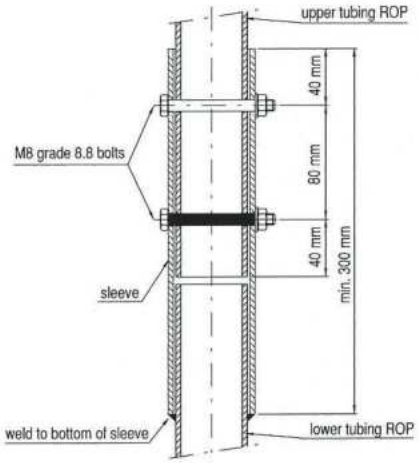

Illustration 14-7: construction removable upper portion

- Per tube two (2) holes as shown to allow M8 grade 8 8 or better bolts
- Bolts through upper tubing, or lower tubing, for removal if desired.
- Sleeve min. 300 mm length (min. wall thickness 3 mm).
- One side of the sleeve has te be welded to tubing
- Sleeve may be on inside or outside ROP tubing.
- An inside sleeve should be mounted with bolts as shown, two (2) bolts through each part (top and bottom) of the ROP.

© page-design etc.: Henny de Graaf, Nieuwleusen (NL)

drukkerij
Nico de Graaf
Nieuwleusen

ETPC

European Tractor Pulling Committee

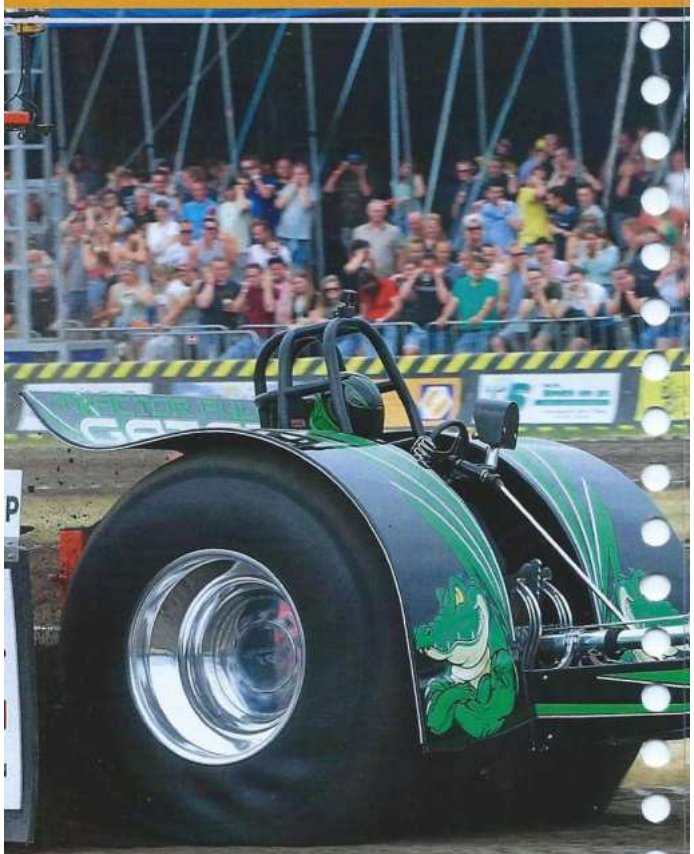

ETPC is sponsored by:

ALLIANCE

2025

DRUKKERIJ NICO DE GRAAF
© Picture: Henry de Graaf,
HP Photo Agency